MA2275

TUBE INTEGRATED AMPLIFIER

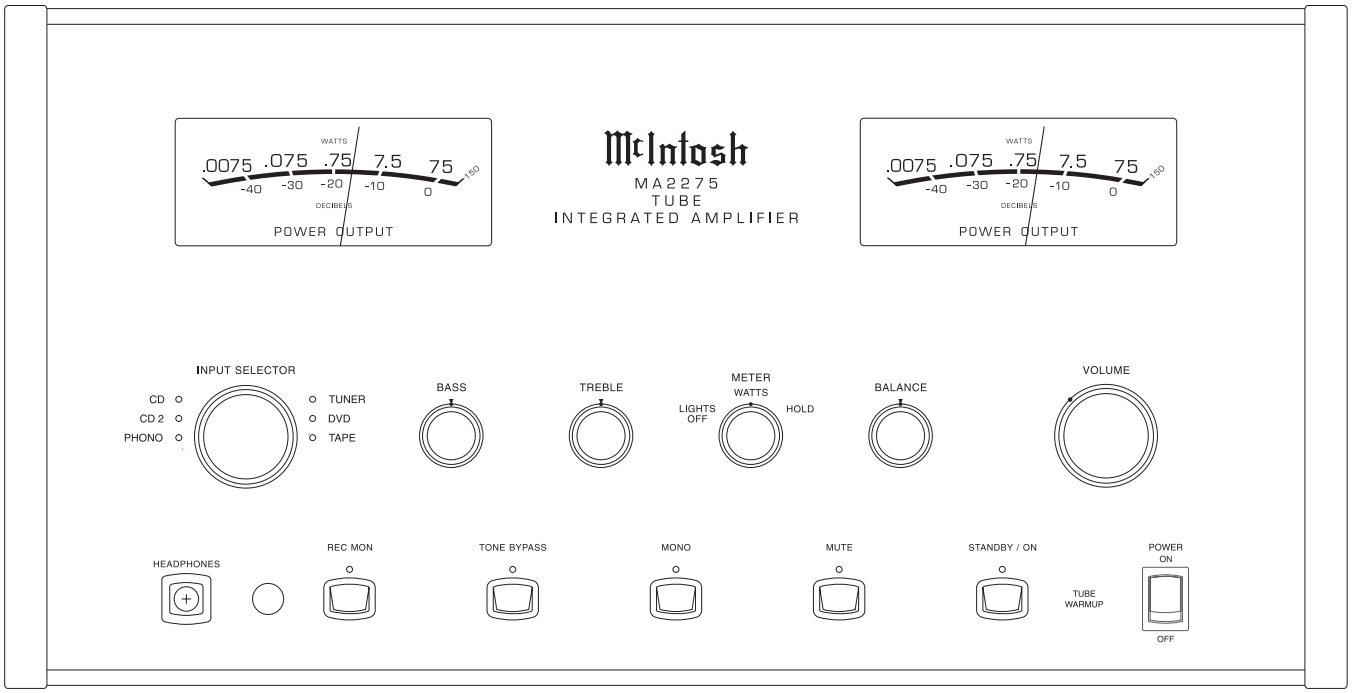

CONTENTS

Performance Specifications 2
Notes 2
Rear Panel 3
Section Location 4
Block Diagram ..... 5 - 7
Interconnection Diagram ..... 8 - 10
Main Schematic and PCB ..... 11 - 16
Control Schematic and PCB ..... 17 - 20
Balanced Schematic and PCB ..... 21 - 22
Volume/Tone Schematic and PCB ..... 23 - 26
Data Schematic and PCB ..... 27 - 28
Pushbutton Schematic and PCB ..... 29 - 30
Amplifier Schematic and PCB ..... 31 - 34
Power Supply Schematic and PCB ..... 35 - 38
Meter Schematic and PCB ..... 39 - 40
Backup PS Schematic and PCB 41
Terminal Schematic and PCB 42
Parts List ..... 43 - 48
Exploded View and Parts List ..... 49 - 52
Repacking Instructions 53

SERVICE MANUAL

PERFORMANCE SPECIFICATIONS

Power Output
Minimum sine wave continuous average power output per channel, both channels operating is:
75 watts into a 2 ohm load
75 watts into a 4 ohm load
75 watts into an 8 ohm load

Rated Power Band
20Hz to 20,000Hz

Total Harmonic Distortion
Maximum Total Harmonic Distortion at any power level from 250 milliwatts to rated power output is:
0.5% for a 2, 4 or 8 ohm load

Frequency Response
+0, -0.5dB from 20Hz to 20,000Hz
+0, -3dB from 10Hz to 50,000Hz

Sensitivity
Phono: 4.4mV for 2.5V preamp output
High Level: 450mV for 2.5V preamp output
Power Amplifier Input: 2.5V for rated output

A-Weighted Signal To Noise Ratio
Phono Input: 80dB below 10mV input
High Level: 97dB below rated output
Power Amplifier: 110dB below rated output

Intermodulation Distortion
Maximum Intermodulation Distortion if instantaneous peak output does not exceed twice the rated output, for any combination of frequencies from 20Hz to 20,000Hz is:
0.5% for a 2, 4 or 8 ohm load

Input Impedance
Phono: 47k ohms, 65pF
High Level: 22k ohms

Maximum Input Signal
Phono: 90mV
High Level: 8V

Preamplifier Maximum Voltage Output
Phono: 8V
High Level: 8V
Main Out: 8V at preamp output

Voltage Gain
High Level to Tape output: 0dB
High Level to Preamp output: 15dB

Wide Band Damping Factor
Greater than 18

Power Requirements
100 Volts, 50/60Hz at 3.6 amps
110 Volts, 50/60Hz at 3.6 amps
120 Volts, 50/60Hz at 3.6 amps
220 Volts, 50/60Hz at 1.8 amps
230 Volts, 50/60Hz at 1.8 amps
240 Volts, 50/60Hz at 1.8 amps
Note: Refer to the rear panel of the MA2275 for the correct voltage.

Preamplifier Tube Compliment
2 - 12AX7A Phono Circuitry
2 - 12AX7A High Level Circuitry

Power Amplifier Tube Compliment
2 - 12AT7
4 - KT88/6550

Overall Dimensions
Width is 17-3/4 inches (45.09cm), Height is 10-1/8 inches (25.72cm) including feet, Depth is 18-3/4 inches (47.63cm) including the Front Panel and Knobs

Weight
77 pounds (35 kg) net, 110 pounds (50 kg) in shipping carton

NOTES

1. The heavy lines on the schematic denote the primary signal path.

2. Unless otherwise noted, all voltages indicated on the schematics are measured under the following conditions:
   a. AC input at 120 volts, 50/60Hz.
   b. All voltages are +/-10% with respect to ground. A high impedance (10 megaohm) voltmeter must be used.

3. Unless otherwise specified:
   a. Resistor values are in ohms.
   b. Capacitor values are microfarads (uF).
   c. Inductor values are in microhenries (uH).

4. On PC board drawings, Square pad indicates:
   a. Polarized Capacitors - Positive
   b. Diodes - Cathode
   c. Others - Pin 1

5. **WARNING**
   Parts marked with the symbol ⚠ have critical characteristics. Use only replacement parts recommended by the manufacturer.

TOP AND REAR VIEWS

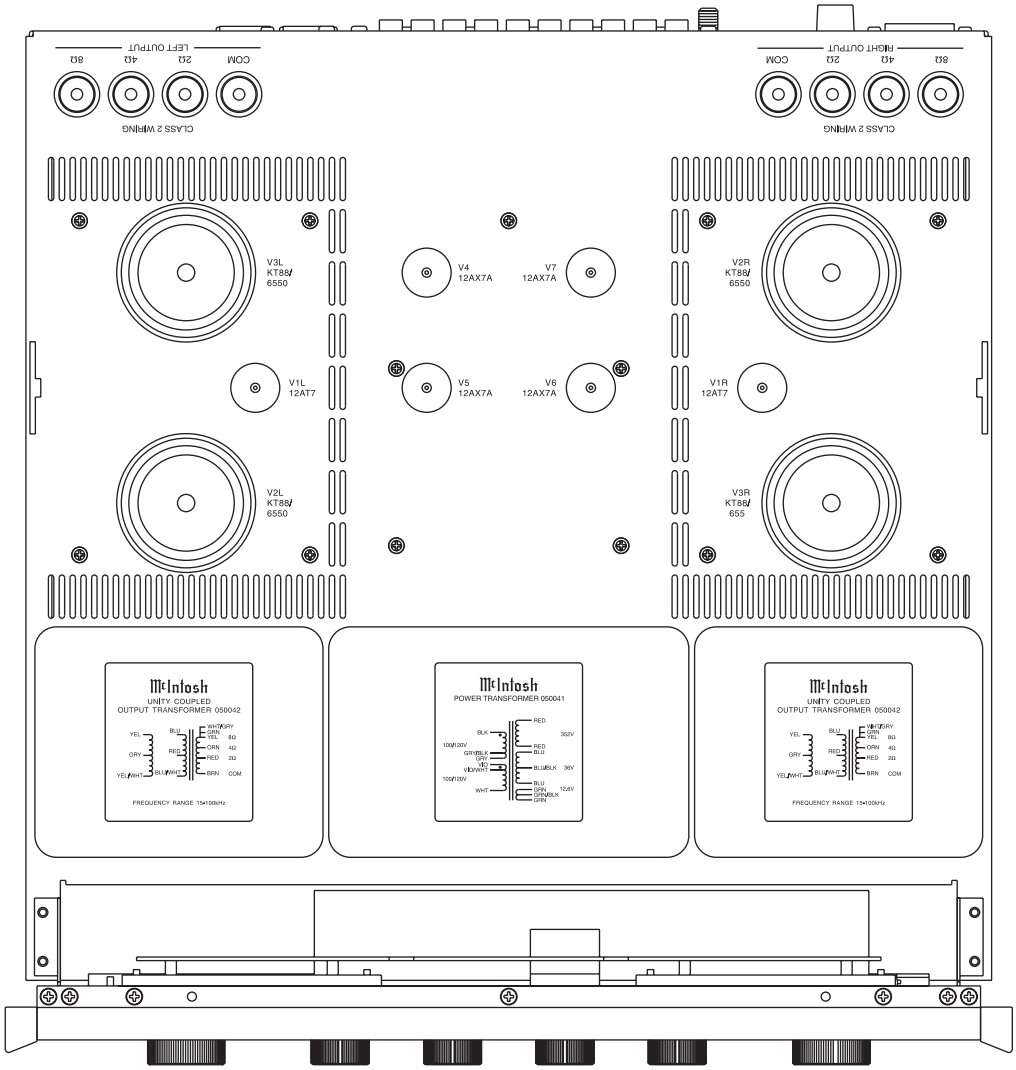

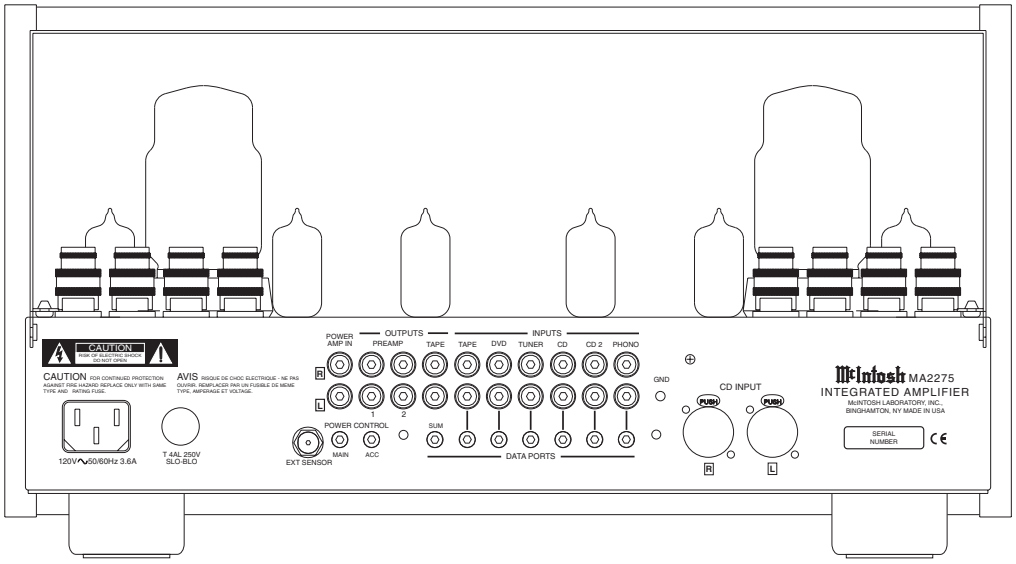

SECTION LOCATIONS

TOP VIEW WITH COVERS REMOVED

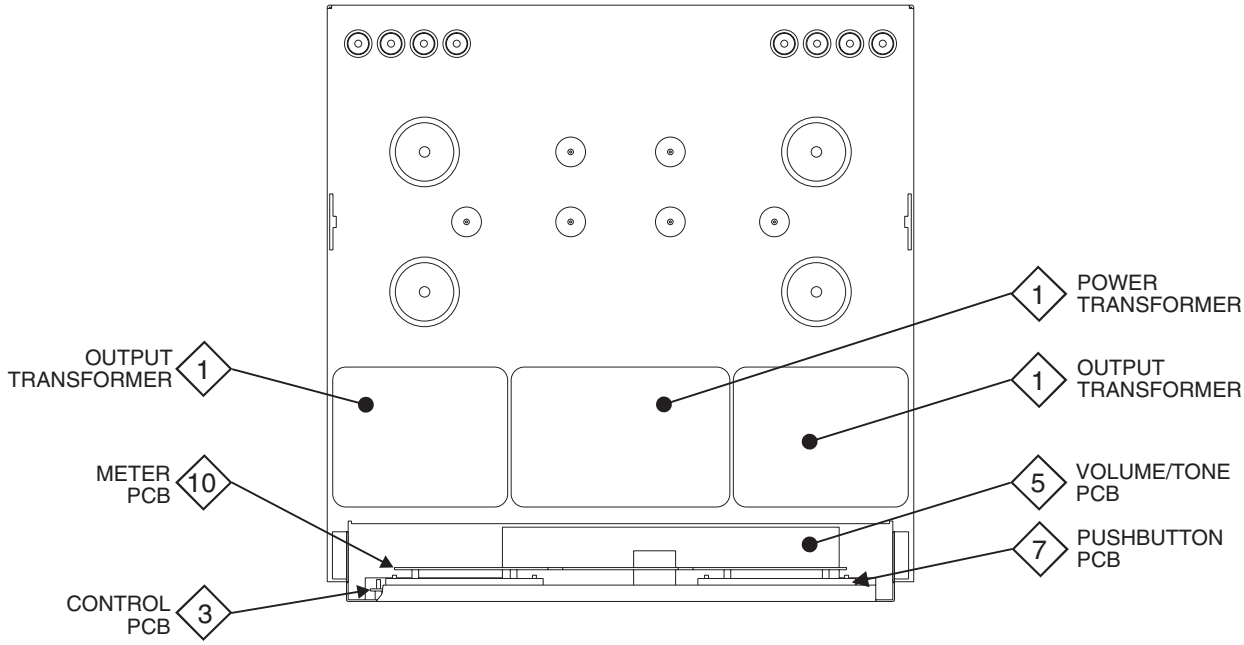

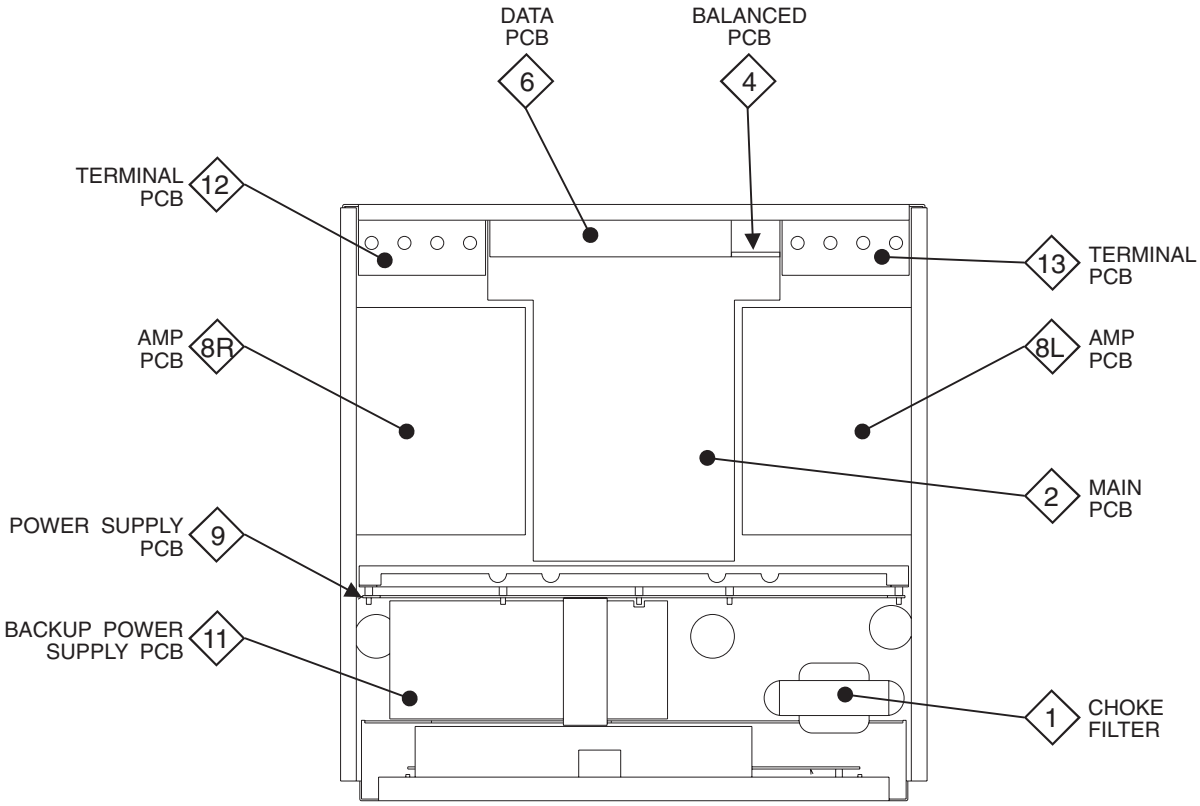

BOTTOM VIEW WITH COVER REMOVED

BLOCK DIAGRAM

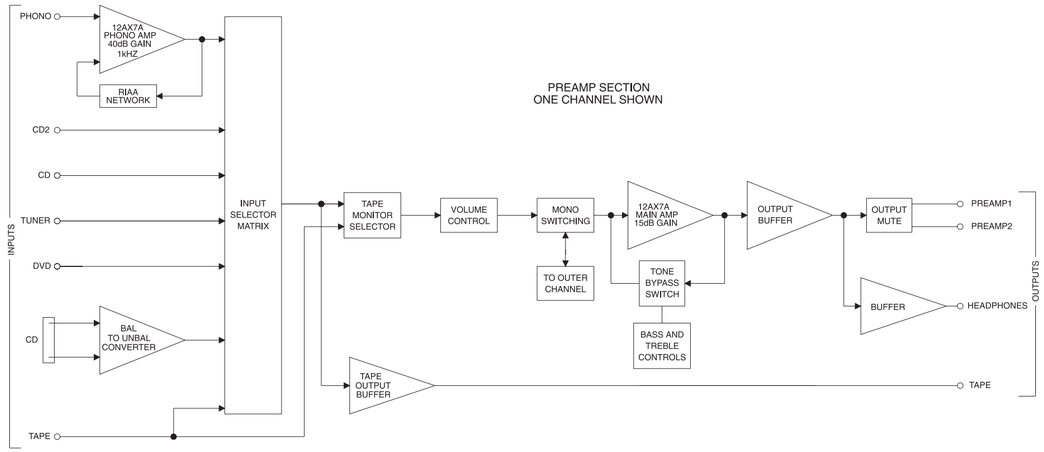

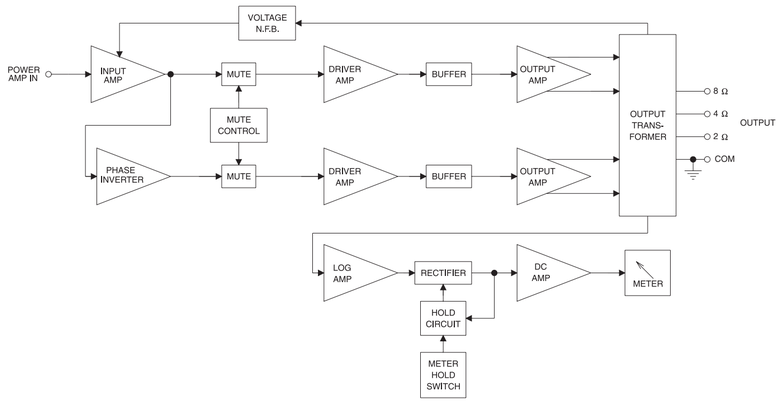

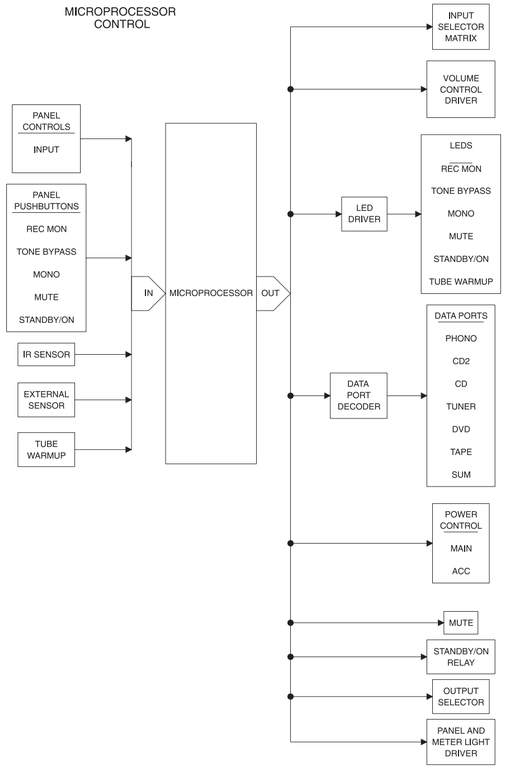

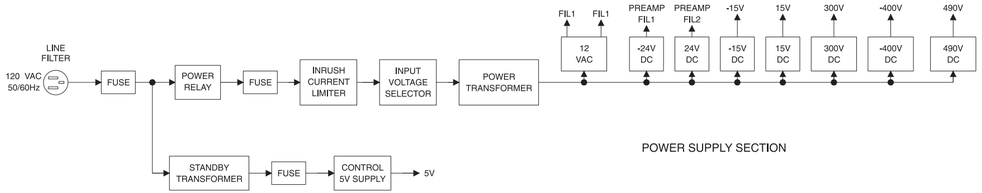

1 INTERCONNECT

⚠ WARNING Parts located in the shaded area have critical characteristics. Use only replacement parts recommended by the manufacturer.

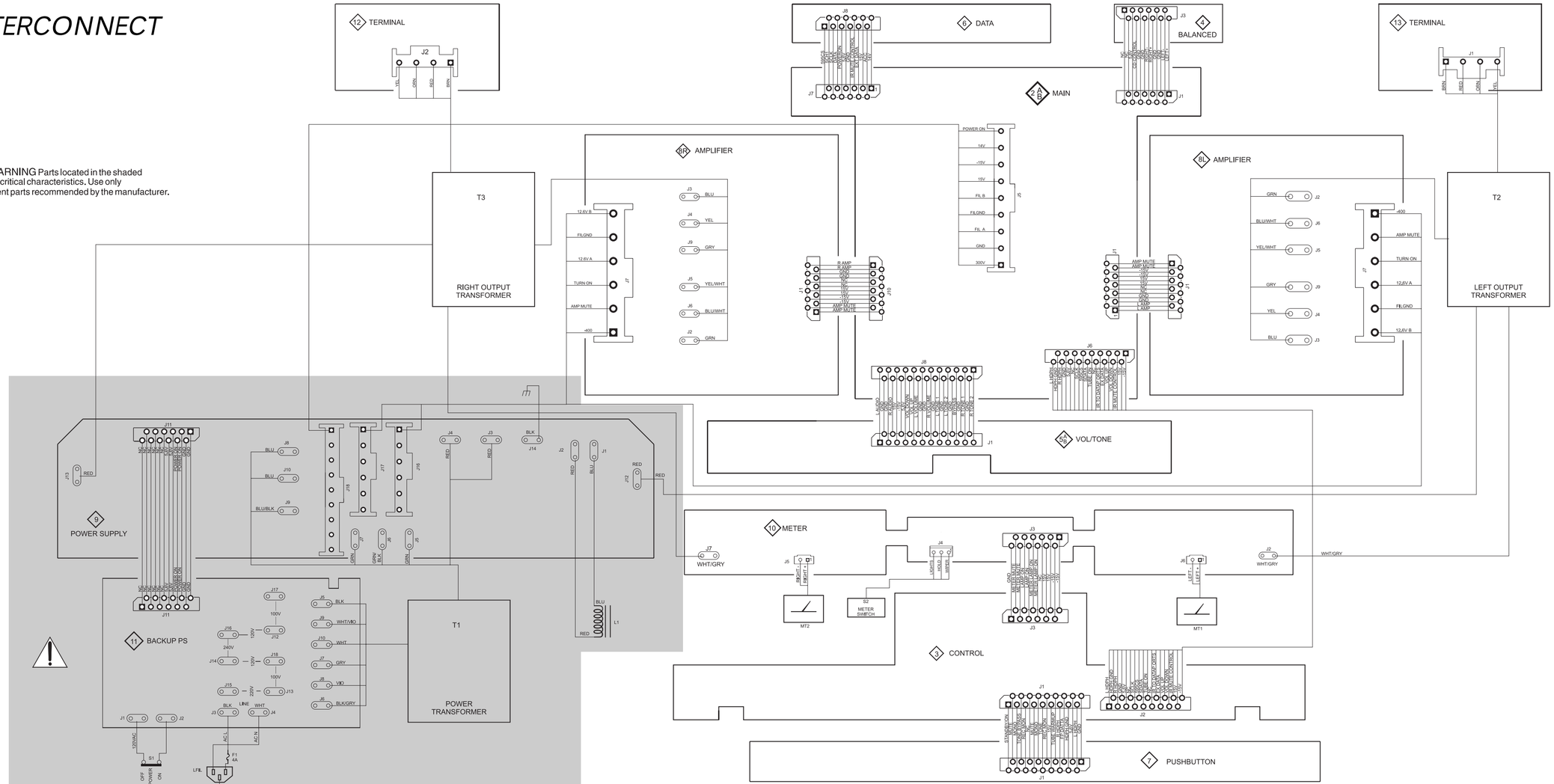

2A MAIN 049965 SH 1 OF 2

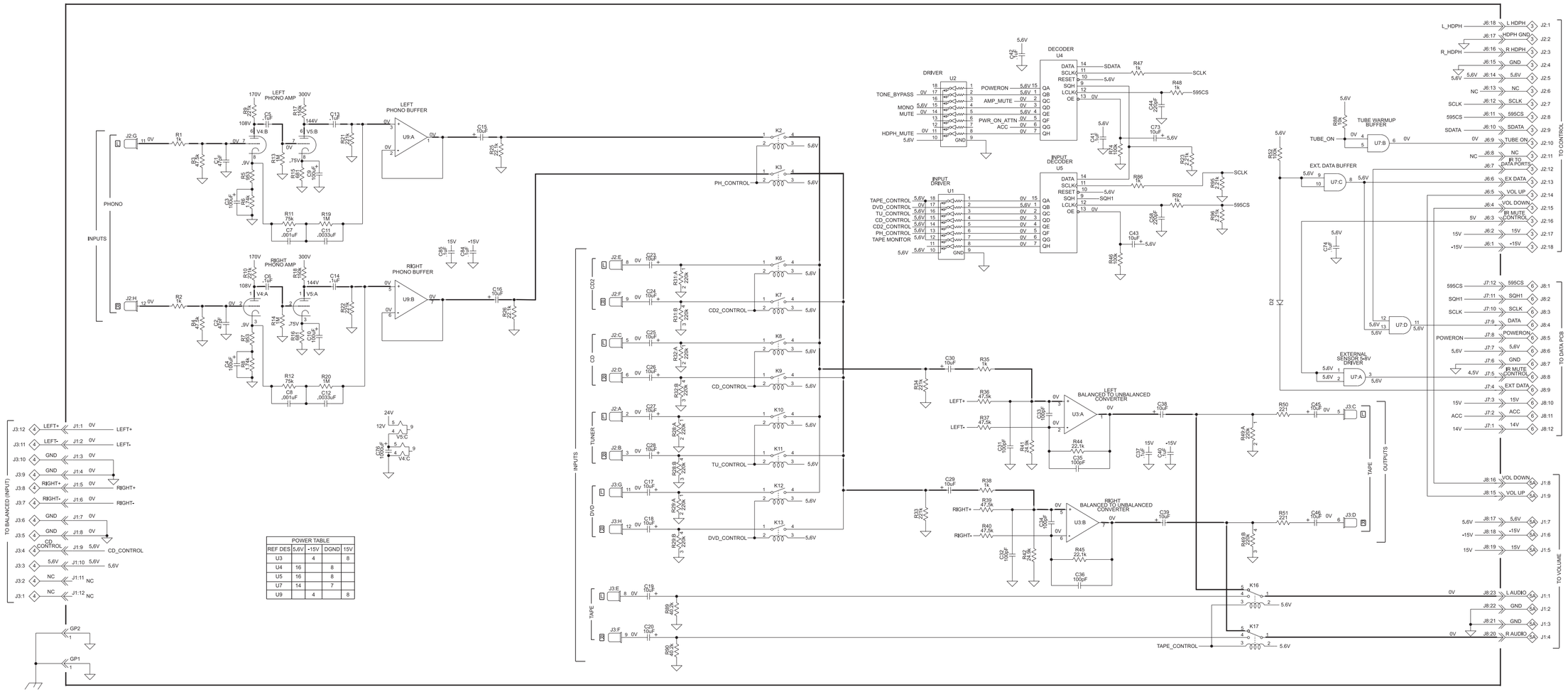

POWER TABLE				
REF DES	5.6V	-15V	DGND	15V
U3		4		8
U4	16		8	
U5	16		8	
U7	14		7	
U9		4		8

2B MAIN 049965 SH 2 OF 2

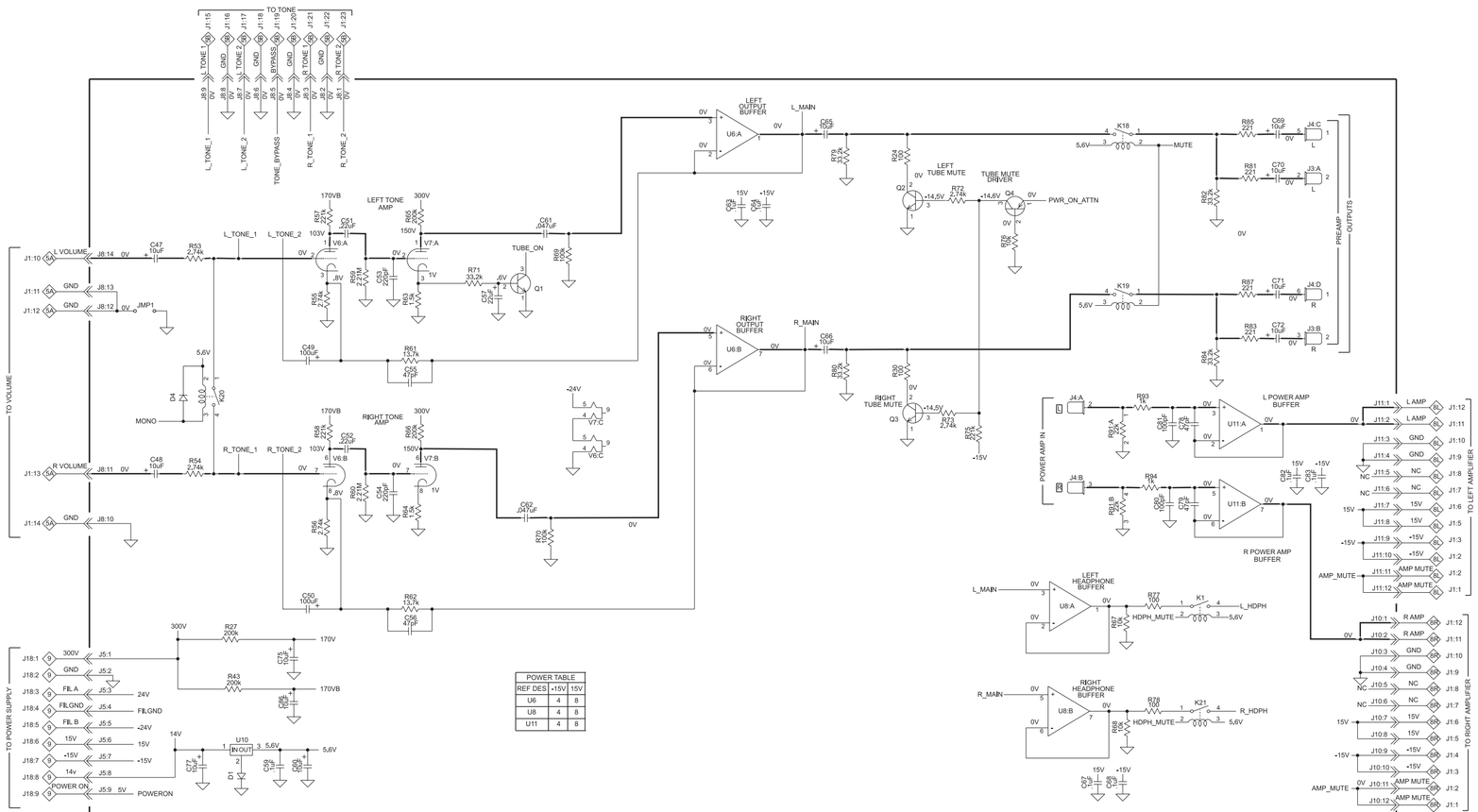

POWER TABLE		
REF DES	+15V	15V
U6	4	8
U8	4	8
U11	4	8

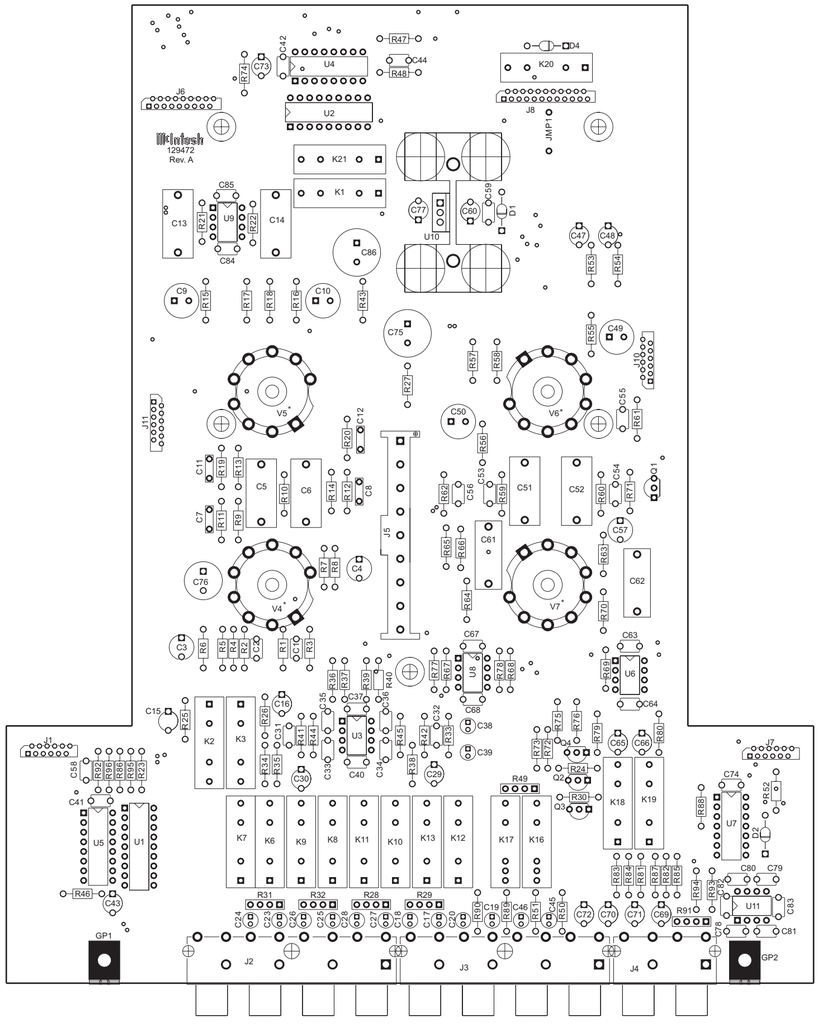

3 CONTROL 049966

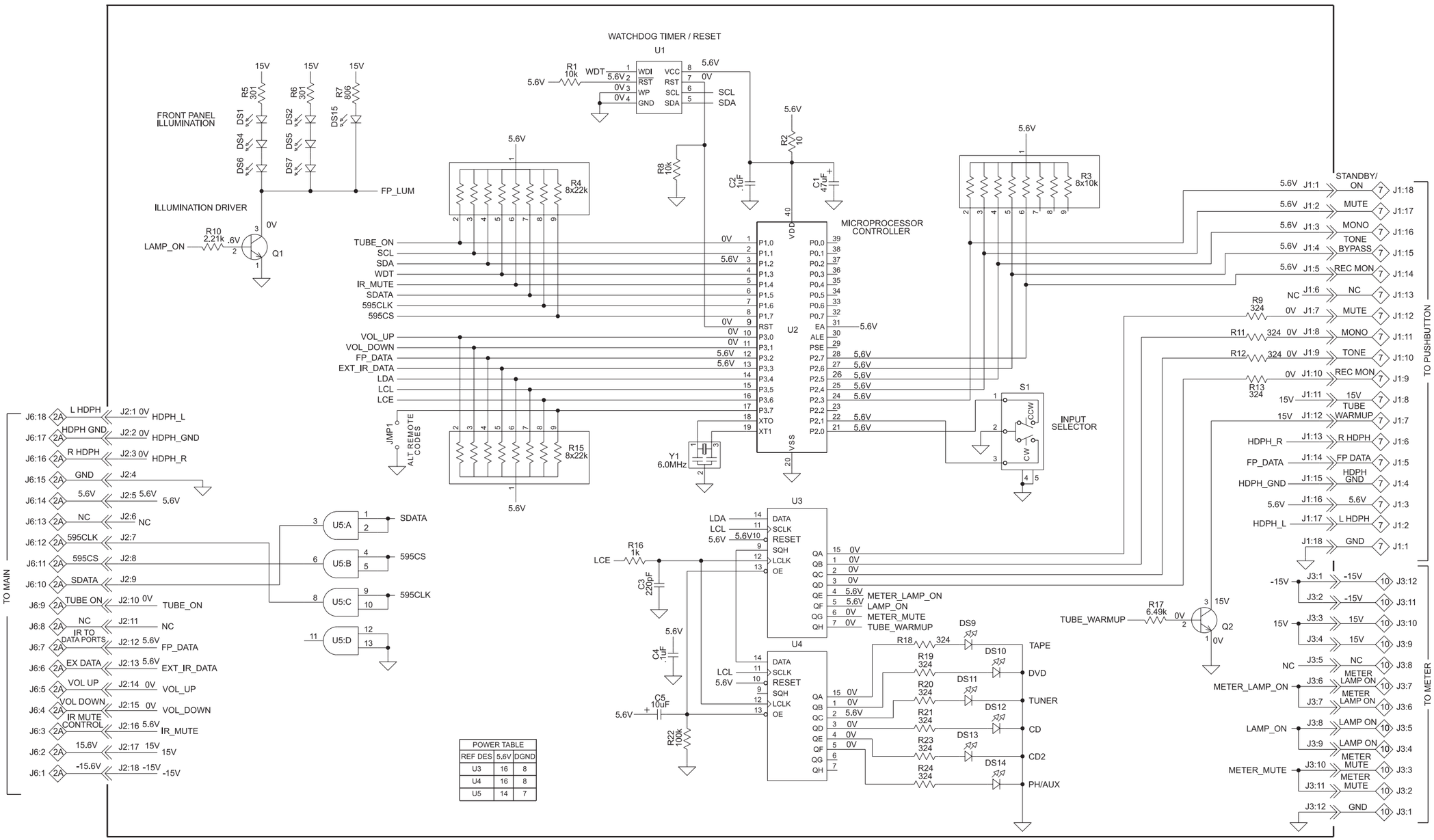

POWER TABLE		
REF DES	5.6V	DGND
U3	16	8
U4	16	8
U5	14	7

3 CONTROL 049966

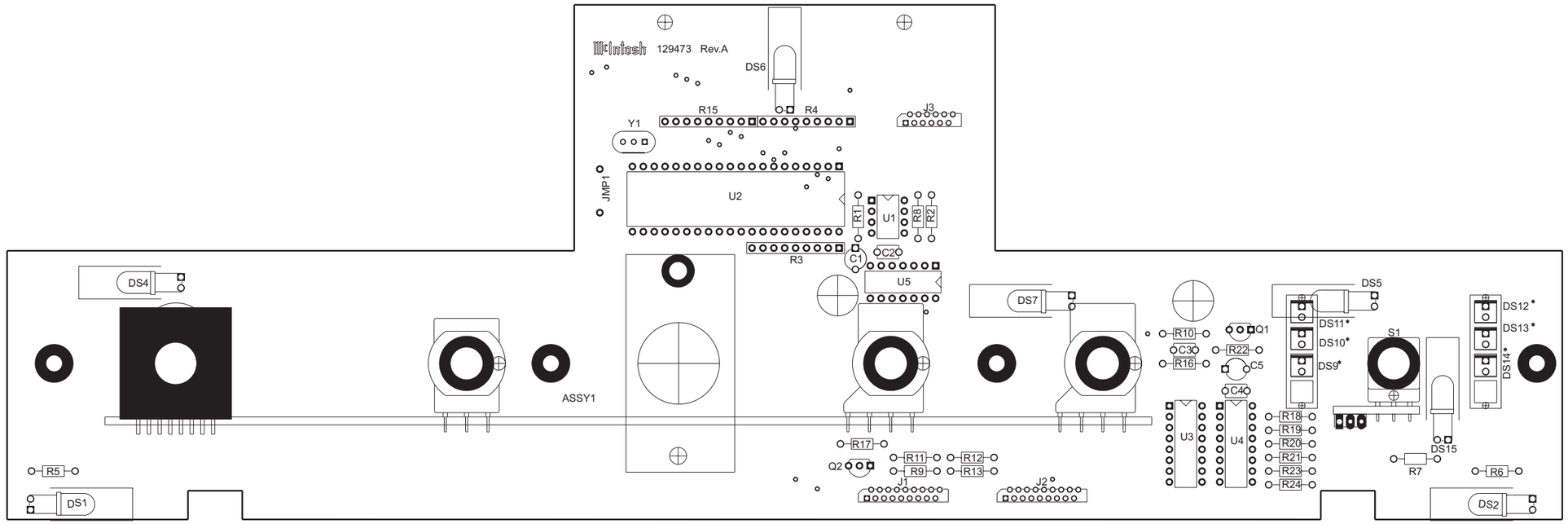

4 BALANCED 049967

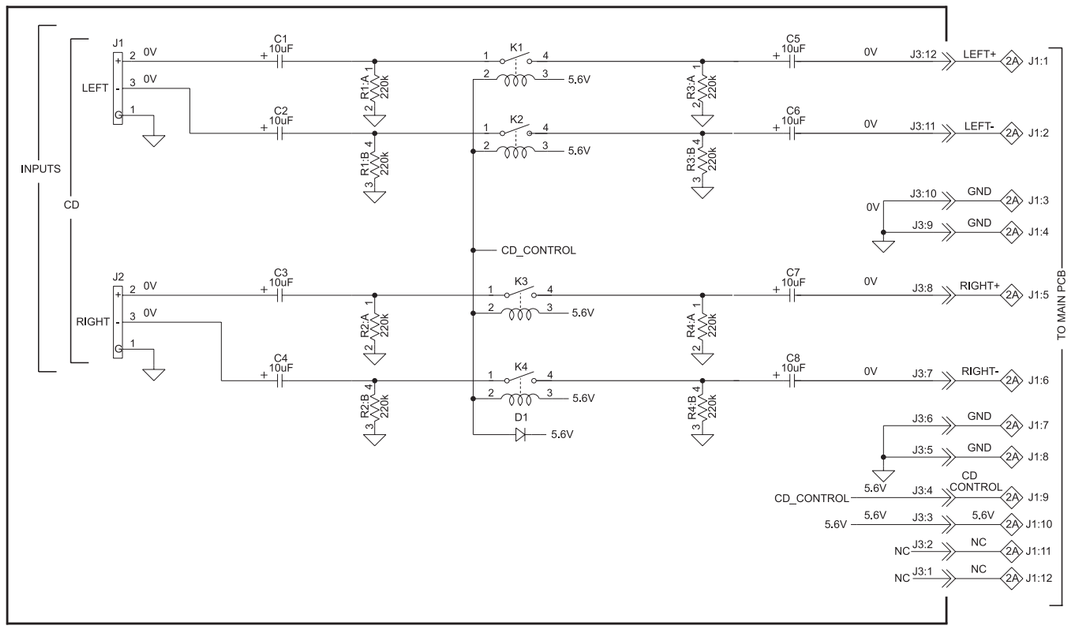

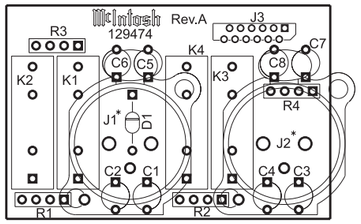

5A VOLUME/TONE 049968

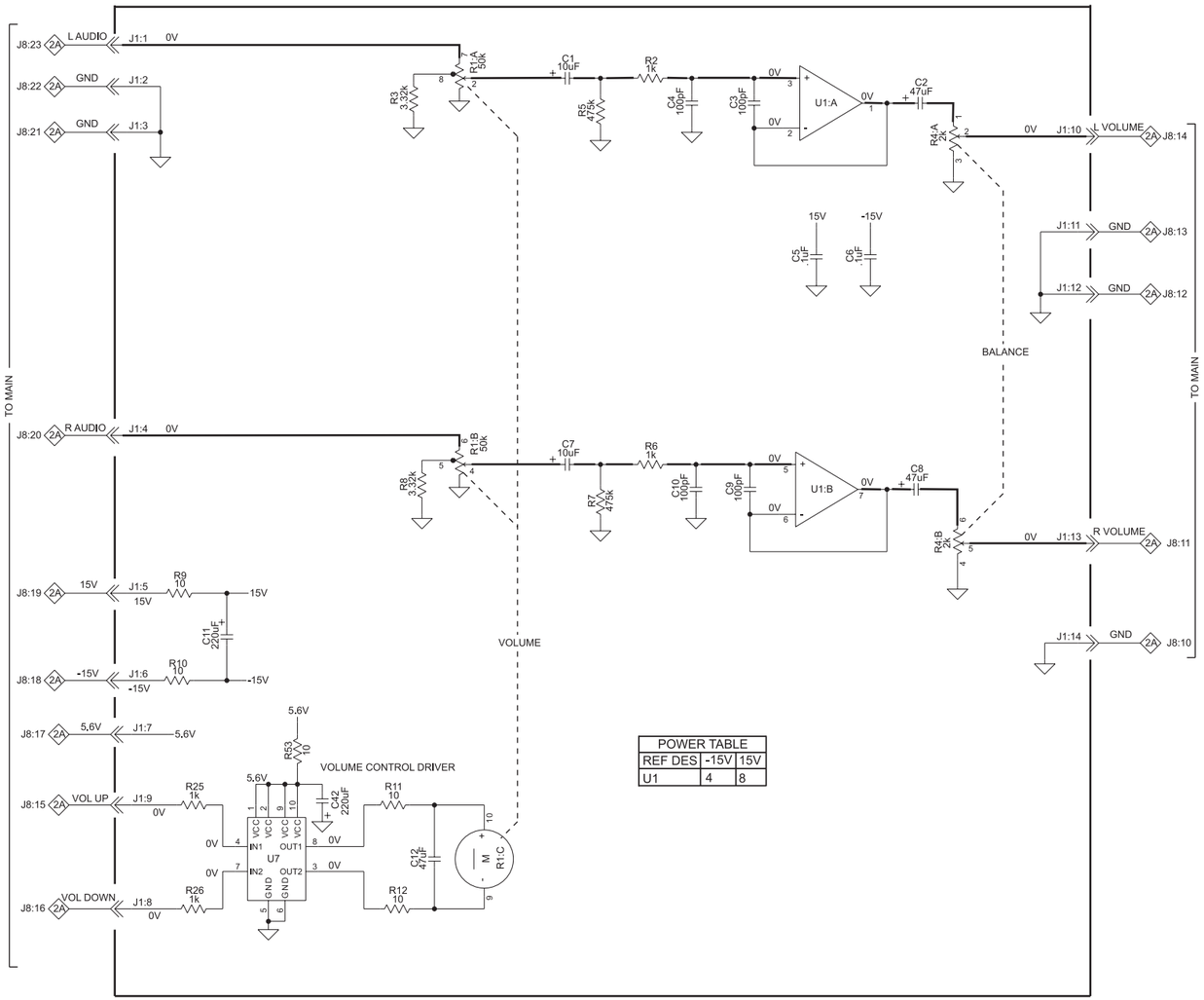

POWER TABLE		
REF DES	-15V	15V
U1	4	8

5B VOLUME/TONE 049968

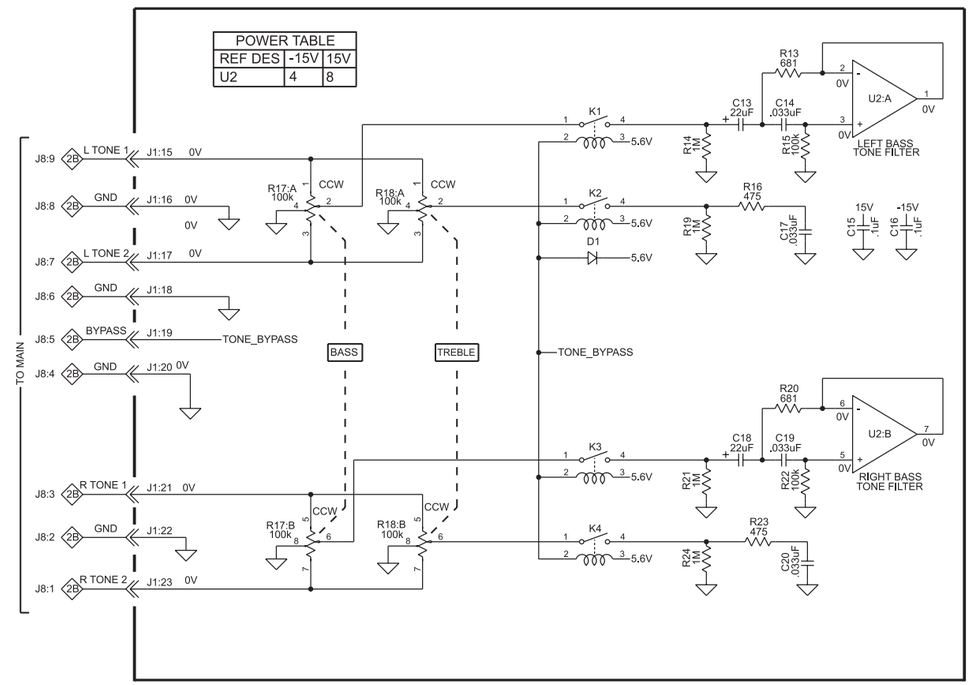

POWER TABLE		
REF DES	-15V	15V
U2	4	8

5 VOLUME/TONE 049968

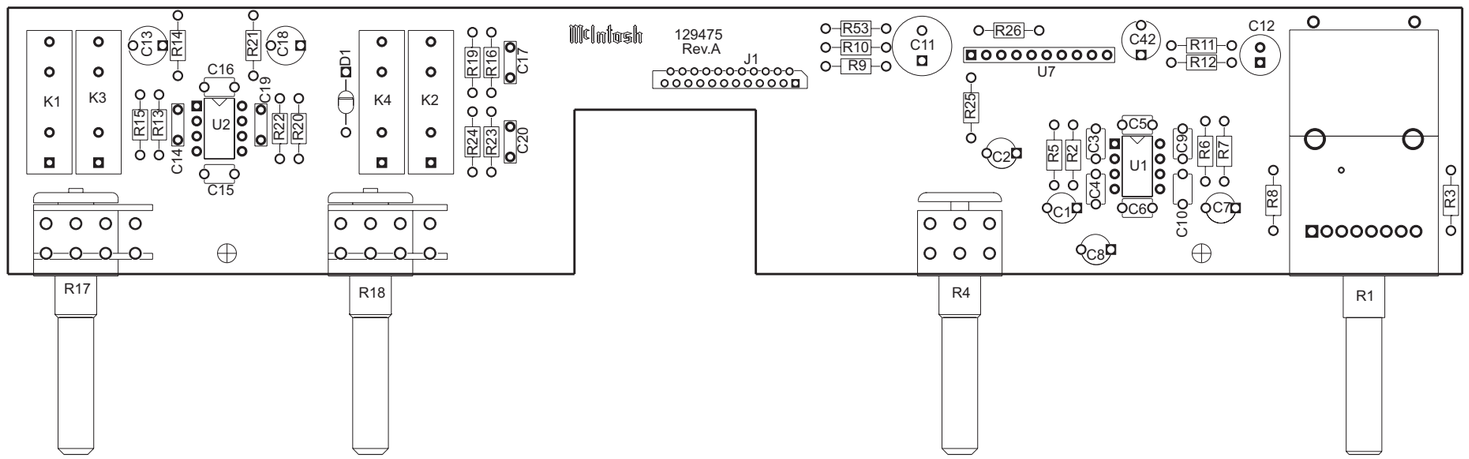

6 DATA 049969

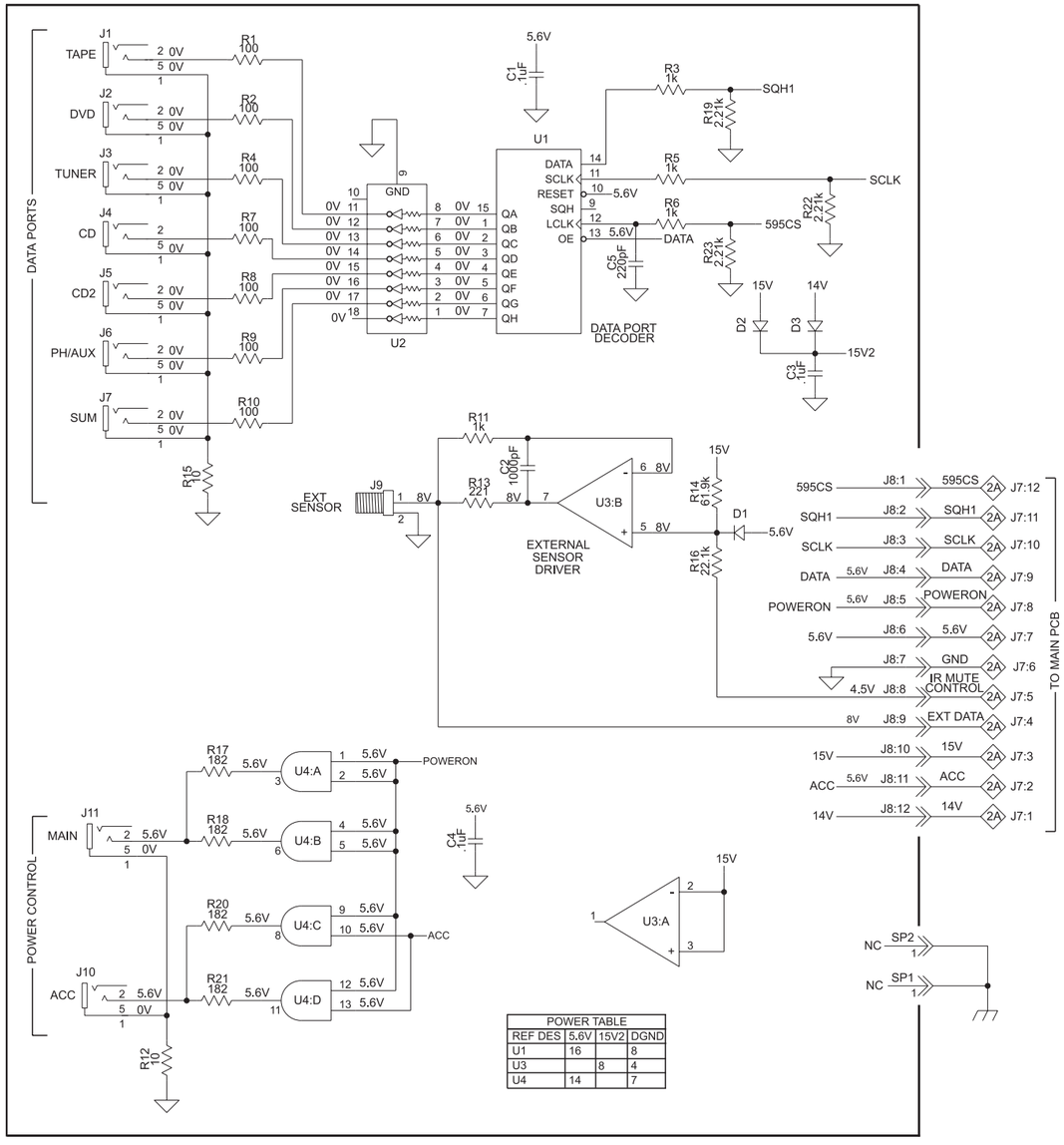

POWER TABLE			
REF DES	5.6V	15V2	DGND
U1	16		8
U3		8	4
U4	14		7

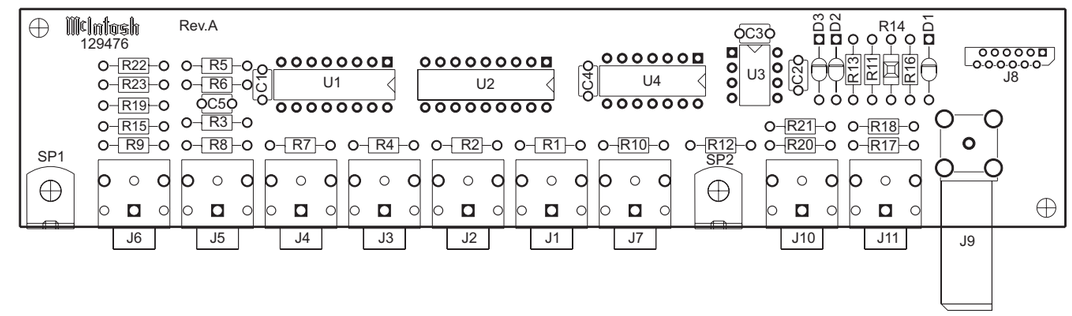

7 PUSHBUTTON 049970

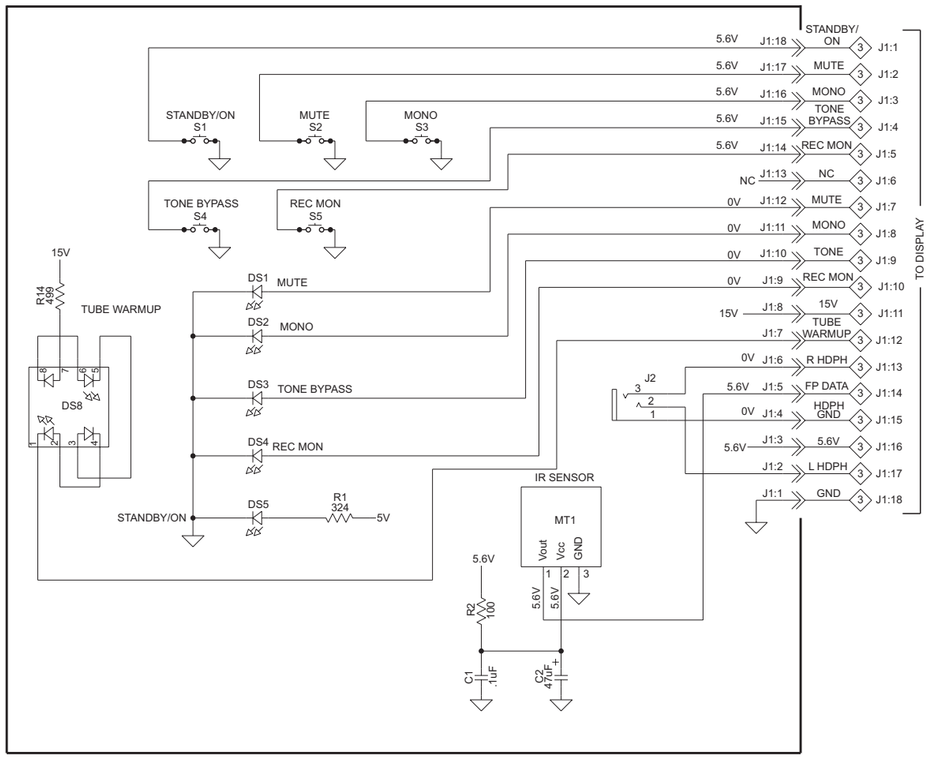

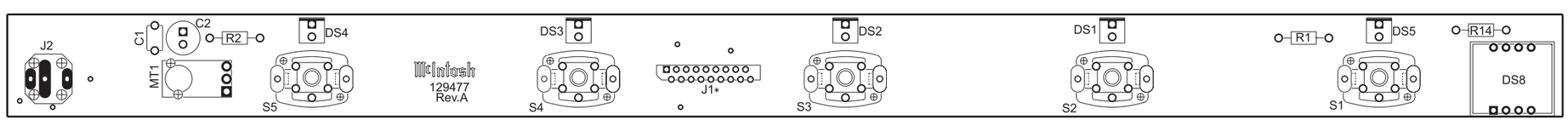

AMPLIFIER 049971

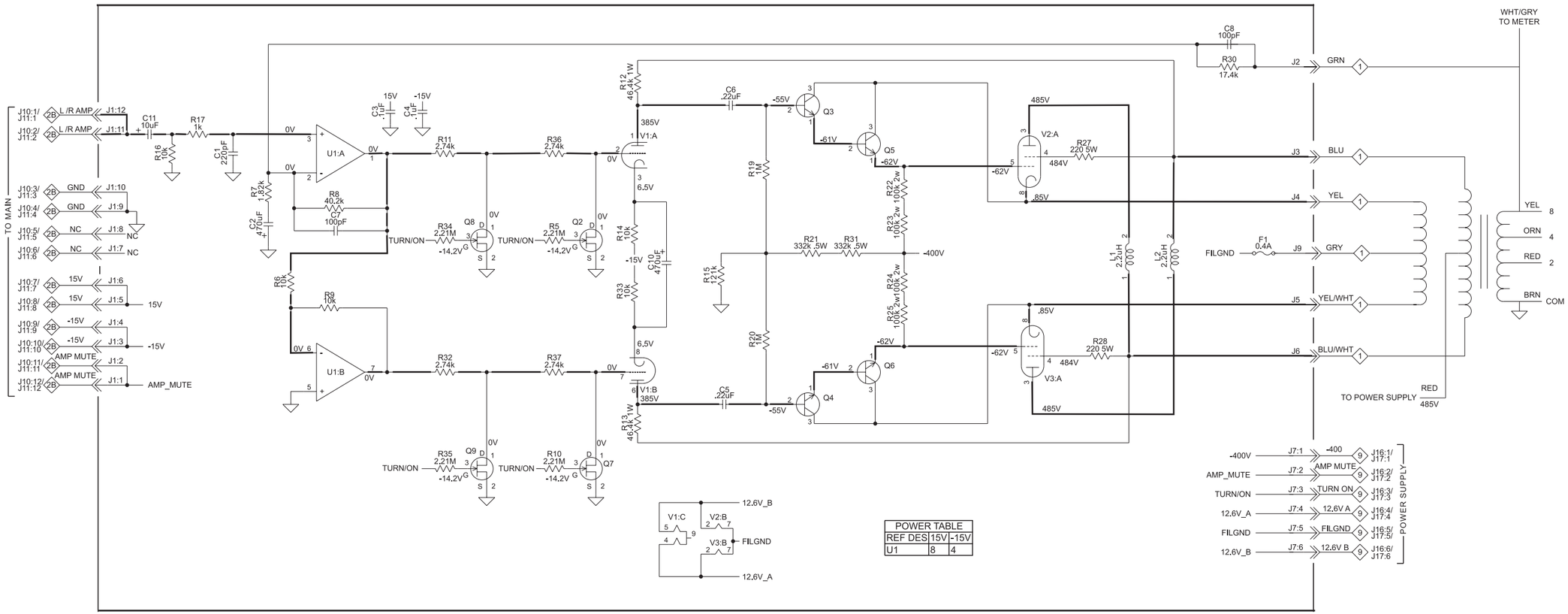

8 AMPLIFIER 049971

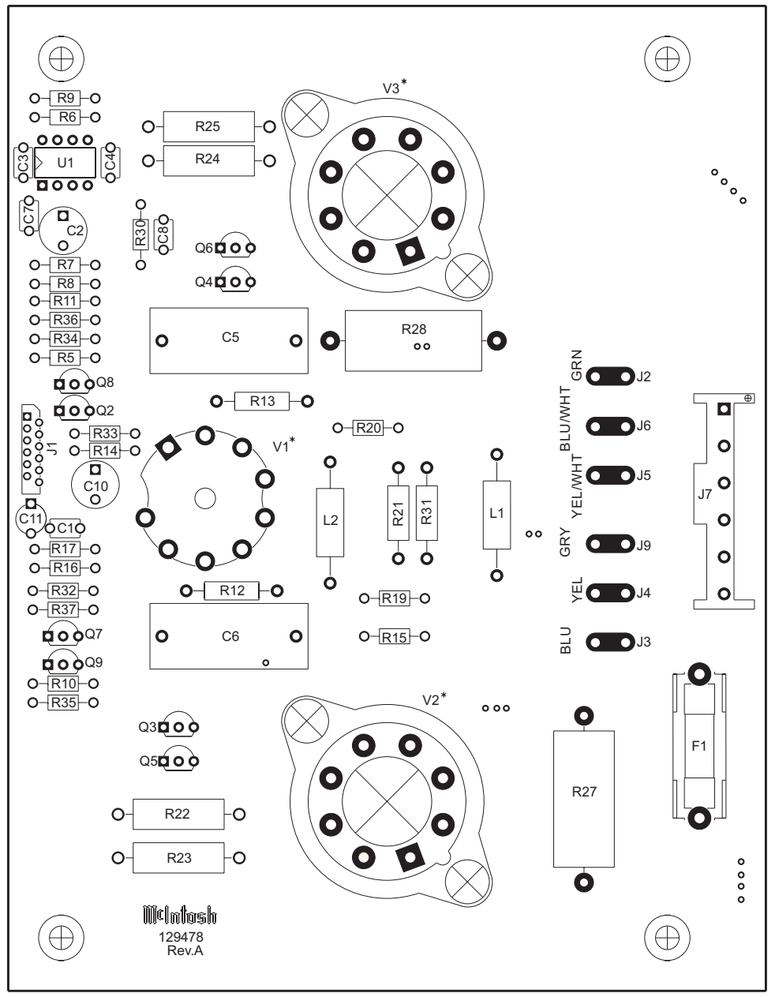

9 POWER SUPPLY 049972

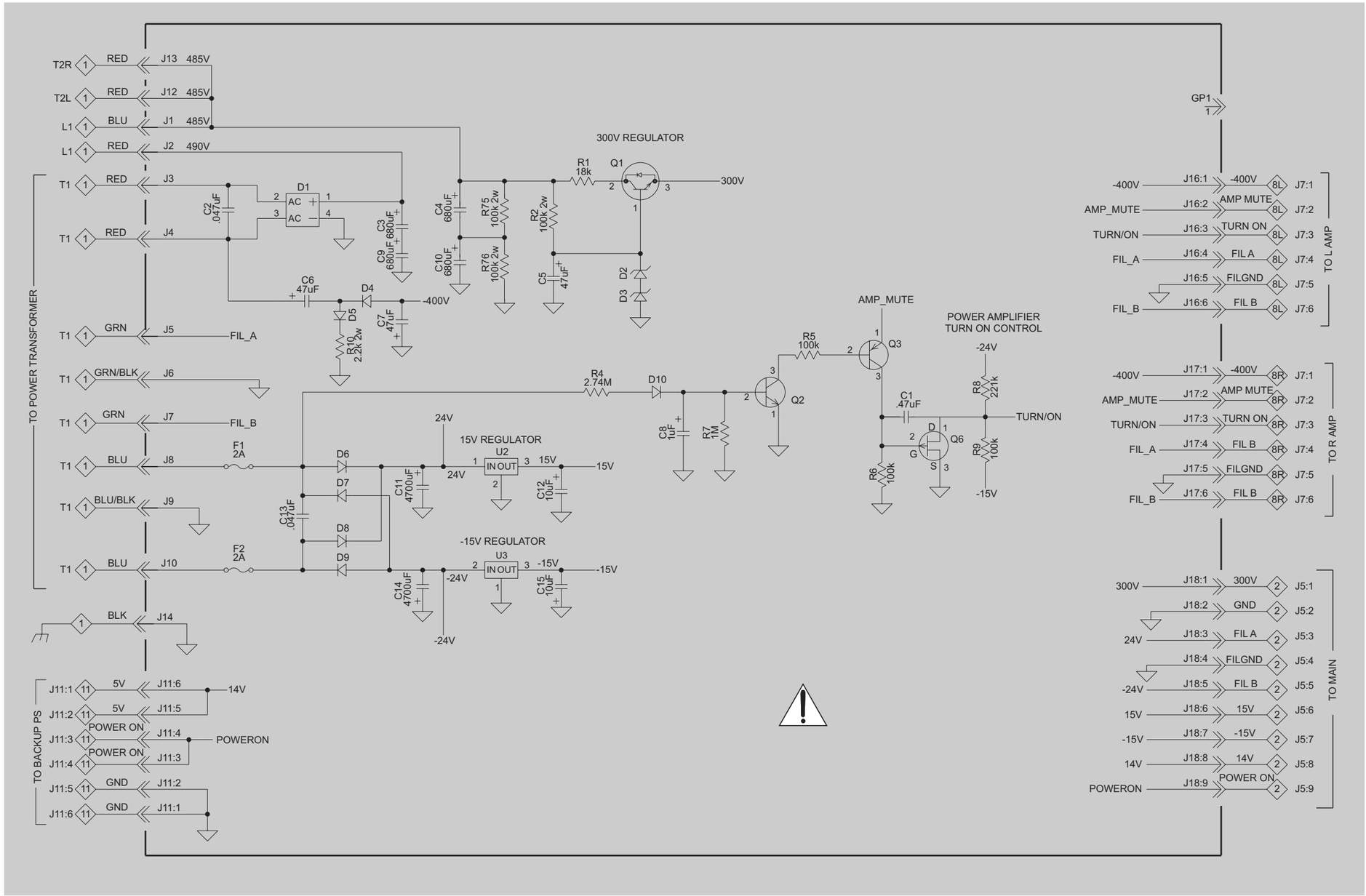

WARNING Parts located in the shaded area have critical characteristics. Use only replacement parts recommended by the manufacturer.

9 POWER SUPPLY 049972

WARNING Parts located in the shaded area have critical characteristics. Use only replacement parts recommended by the manufacturer.

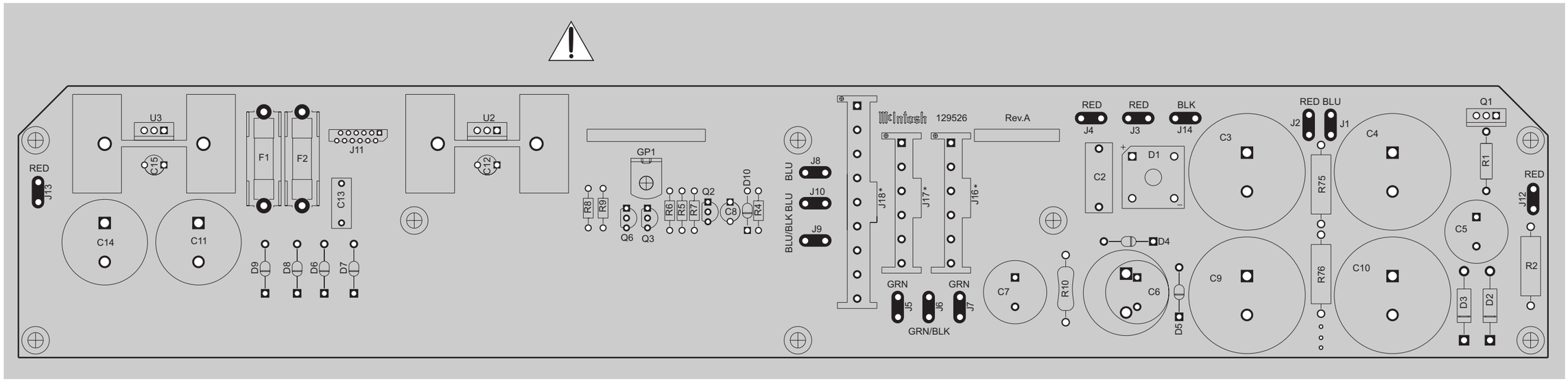

10 METER 049973

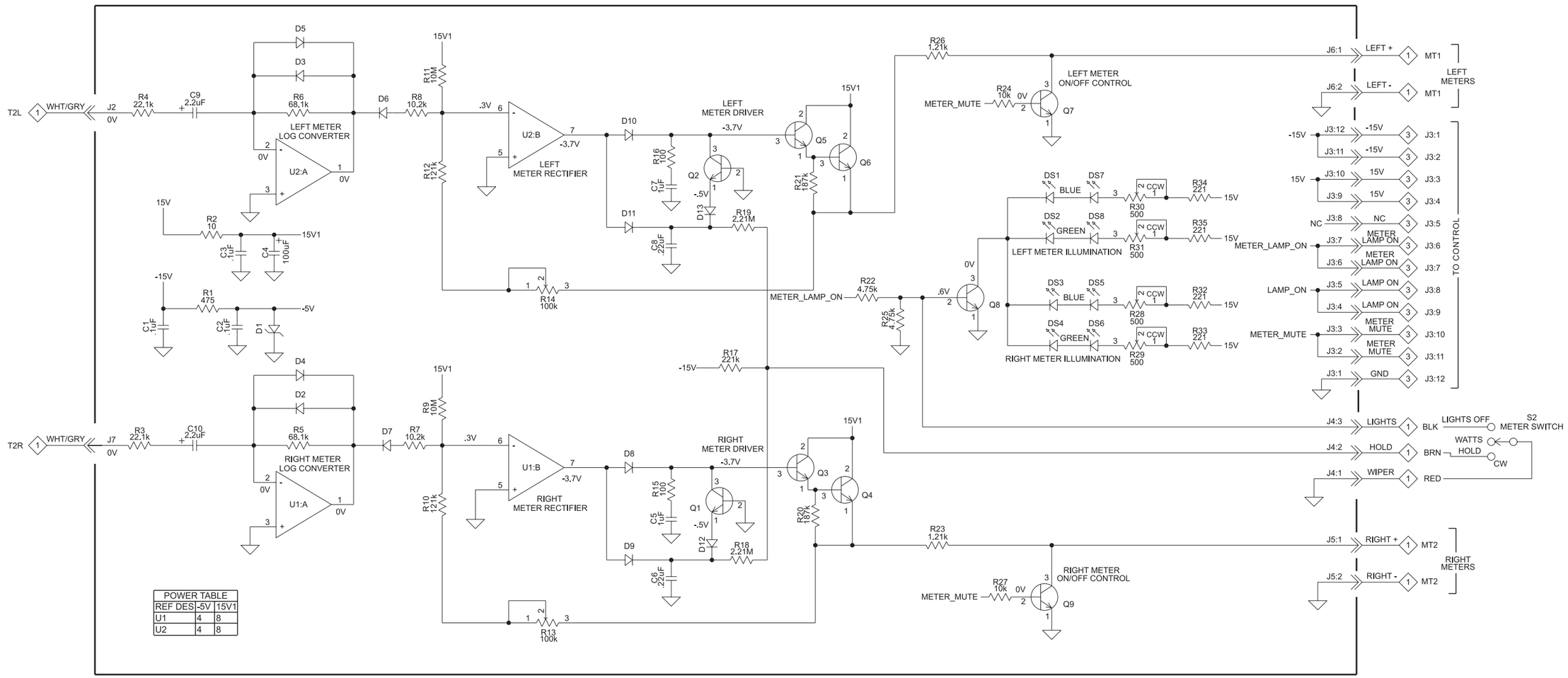

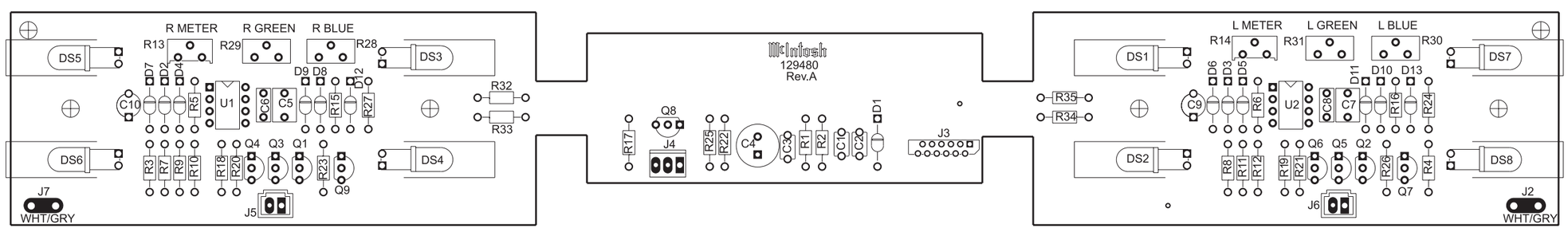

11 BACKUP PS 050007

WARNING Parts located in the shaded area have critical characteristics. Use only replacement parts recommended by the manufacturer.

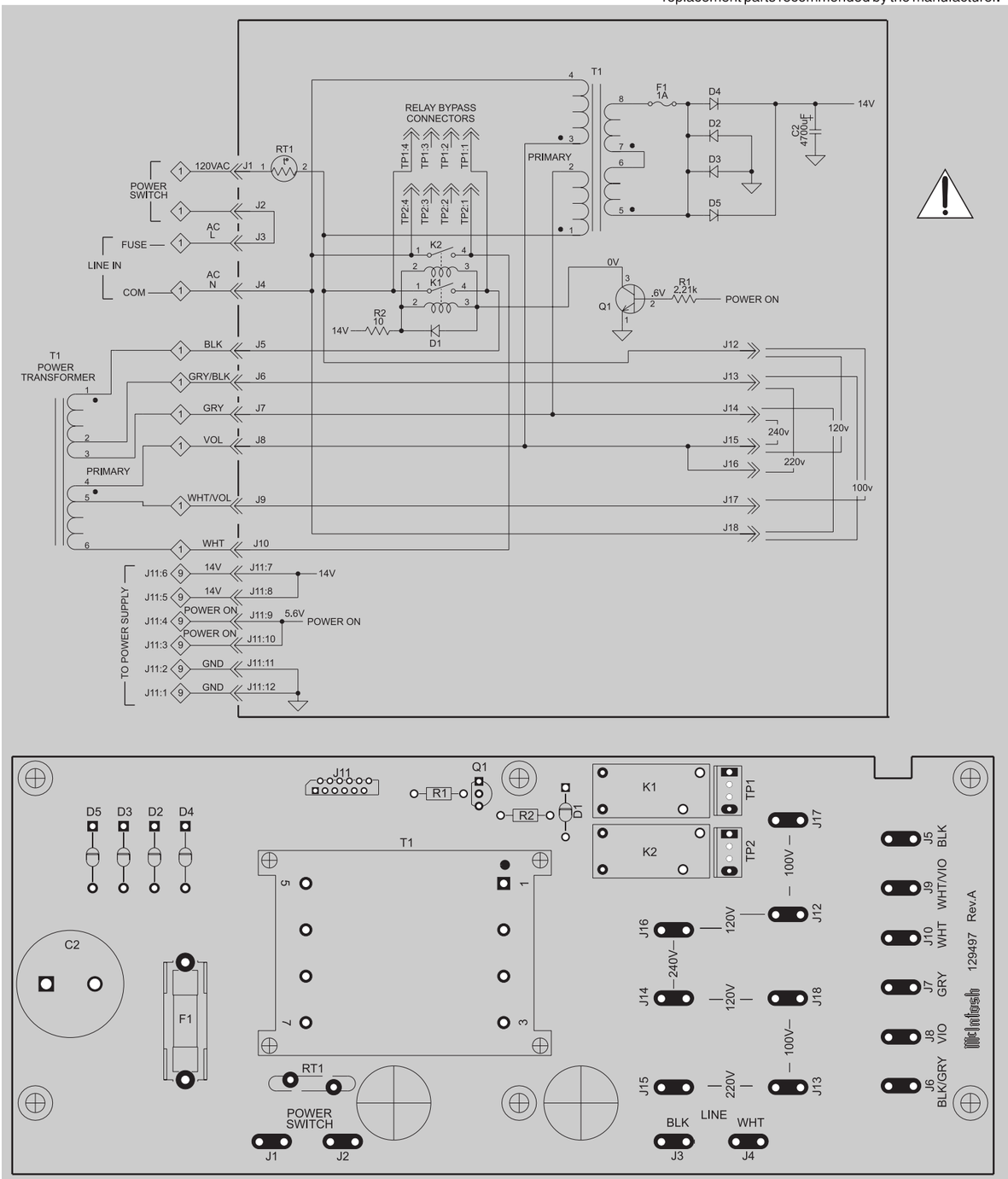

12 TERMINAL 050052

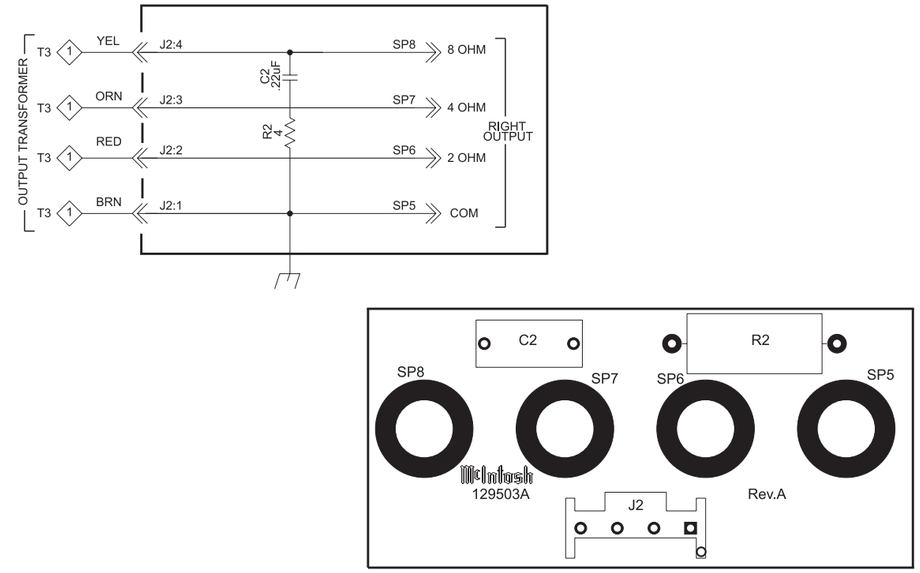

13 TERMINAL 050052

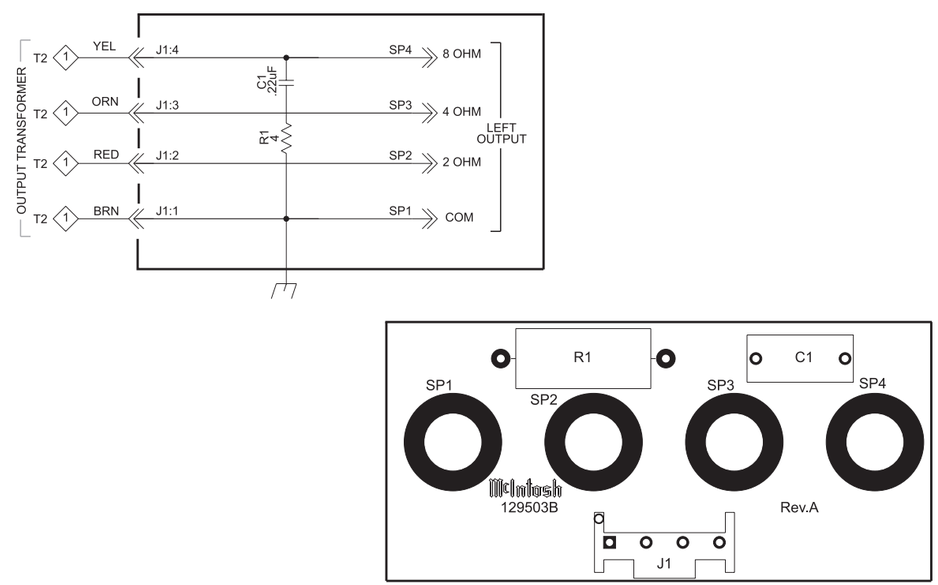

PARTS LIST

Ref. No.	Description	Part No.
1	**INTERCONNECT**	
L1	CHOKE FILTER .5H	122379
LFIL	LINE FILTER	117755
MT1	METER	124087
MT2	METER	124087
S1	POWER SWITCH	171026
S2	SWITCH	146243
T1	POTTED TRANSFORMER, POWER	050041
T2	POTTED TRANSFORMER, OUTPUT	050042
T3	POTTED TRANSFORMER, OUTPUT	050042
2	**049965 MAIN PCB**	
C1	CAP MONO 47PF 200V 10% NPO	061299
C2	CAP MONO 47PF 200V 10% NPO	061299
C3	CAP ELECT 100UF 16V OR 25V	066447
C4	CAP ELECT 100UF 16V OR 25V	066447
C5	CAP MPF 0.1UF 630VDC	064431
C6	CAP MPF 0.1UF 630VDC	064431
C7	CAP PF 0.001UF 5% 63VDC	064300
C8	CAP PF 0.001UF 5% 63VDC	064300
C9	CAP ELECT 100UF 25V-50V	066161
C10	CAP ELECT 100UF 25V-50V	066161
C11	CAP MPF 0.0033UF 5% 63VDC	064306
C12	CAP MPF 0.0033UF 5% 63VDC	064306
C13	CAP MPF 0.1UF 630VDC	064431
C14	CAP MPF 0.1UF 630VDC	064431
C15	CAP ELECT 10UF 50V	066445
C16	CAP ELECT 10UF 50V	066445
C17	CAP ELECT 10UF 16V 4X5 CASE	066382
C18	CAP ELECT 10UF 16V 4X5 CASE	066382
C19	CAP ELECT 10UF 16V 4X5 CASE	066382
C20	CAP ELECT 10UF 16V 4X5 CASE	066382
C23	CAP ELECT 10UF 16V 4X5 CASE	066382
C24	CAP ELECT 10UF 16V 4X5 CASE	066382
C25	CAP ELECT 10UF 16V 4X5 CASE	066382
C26	CAP ELECT 10UF 16V 4X5 CASE	066382
C27	CAP ELECT 10UF 16V 4X5 CASE	066382
C28	CAP ELECT 10UF 16V 4X5 CASE	066382
C29	CAP ELECT 10UF 50V	066445
C30	CAP ELECT 10UF 50V	066445
C31	CAP MONO 100PF 100V 10% NPO	061300
C32	CAP MONO 100PF 100V 10% NPO	061300
C33	CAP MONO 100PF 100V 10% NPO	061300
C34	CAP MONO 100PF 100V 10% NPO	061300
C35	CAP MONO 100PF 100V 10% NPO	061300
C36	CAP MONO 100PF 100V 10% NPO	061300
C37	CAP MONO .1uF 50V 20% Z5U	061305
C38	CAP ELECT 10UF 16V 4X5 CASE	066382
C39	CAP ELECT 10UF 16V 4X5 CASE	066382
C40	CAP MONO .1uF 50V 20% Z5U	061305
C41	CAP MONO .1uF 50V 20% Z5U	061305
C42	CAP MONO .1uF 50V 20% Z5U	061305
C43	CAP ELECT 10UF 50V	066445
C44	CAP MONO 220PF 100V 10% NPO	061301
C45	CAP ELECT 10UF 16V 4X5 CASE	066382
C46	CAP ELECT 10UF 16V 4X5 CASE	066382
C47	CAP ELECT 10UF 50V	066445
C48	CAP ELECT 10UF 50V	066445
C49	CAP ELECT 100UF 25V-50V	066161
C50	CAP ELECT 100UF 25V-50V	066161
C51	CAP MPF 0.22UF 400VDC	064438
C52	CAP MPF 0.22UF 400VDC	064438
C53	CAP MONO 220PF 100V 10% NPO	061301
C54	CAP MONO 220PF 100V 10% NPO	061301
C55	CAP MONO 47PF 200V 10% NPO	061299
C56	CAP MONO 47PF 200V 10% NPO	061299
C57	CAP ELECT 22UF 100V	066506
C58	CAP MONO 220PF 100V 10% NPO	061301
C59	CAP MONO .1uF 50V 20% Z5U	061305
C60	CAP ELECT 10UF 50V	066445
C61	CAP POLY .047UF 10% 1000VDC	064434
C62	CAP POLY .047UF 10% 1000VDC	064434
C63	CAP MONO .1uF 50V 20% Z5U	061305
C64	CAP MONO .1uF 50V 20% Z5U	061305
C65	CAP ELECT 10UF 50V	066445
C66	CAP ELECT 10UF 50V	066445
C67	CAP MONO .1uF 50V 20% Z5U	061305
C68	CAP MONO .1uF 50V 20% Z5U	061305
C69	CAP ELECT 10uF 50V	066445
C70	CAP ELECT 10uF 50V	066445
C71	CAP ELECT 10uF 50V	066445
C72	CAP ELECT 10uF 50V	066445
C73	CAP ELECT 10UF 50V	066445
C74	CAP MONO .1uF 50V 20% Z5U	061305
C75	CAP ELECT 10UF 250V	066493
C76	CAP ELECT 1000UF 25V	066513
C77	CAP ELECT 10UF 50V	066445
C78	CAP MONO 47PF 200V 10% NPO	061299
C79	CAP MONO 47PF 200V 10% NPO	061299
C80	CAP MONO 100PF 100V 10% NPO	061300
C81	CAP MONO 100PF 100V 10% NPO	061300
C82	CAP MONO .1uF 50V 20% Z5U	061305
C83	CAP MONO .1uF 50V 20% Z5U	061305
C84	CAP MONO .1uF 50V 20% Z5U	061305
C85	CAP MONO .1uF 50V 20% Z5U	061305
C86	CAP ELECT 10UF 250V	066493
D1	DIODE SILICON	070047
D2	DIODE SILICON	070047
D4	DIODE SILICON	070047
GP1	BRACKET PCB CARD MOUNTING	003611
GP2	BRACKET PCB CARD MOUNTING	003611
J1	CONN 12 PIN FFC	117720
J2	JACK RCA 4X2 WHT/RED 14MM	117791
J3	JACK RCA 4X2 WHT/RED 14MM	117791
J4	JACK RCA 2X2 WHT/RED 14MM	117789
J5	HEADER 9 CIRCUIT POST NATURAL	117724
J6	CONN FFC 18PIN	117765
J7	CONN 12 PIN FFC	117720
J8	CONN 23 PIN FFC	117715
J10	CONN 12 PIN FFC	117720
J11	CONN 12 PIN FFC	117720
K1	RELAY REED FORM 1A 5V 500 OHMS	087050
K2	RELAY REED FORM 1A 5V 500 OHMS	087050
K3	RELAY REED FORM 1A 5V 500 OHMS	087050
K6	RELAY REED FORM 1A 5V 500 OHMS	087050
K7	RELAY REED FORM 1A 5V 500 OHMS	087050
K8	RELAY REED FORM 1A 5V 500 OHMS	087050
K9	RELAY REED FORM 1A 5V 500 OHMS	087050
K10	RELAY REED FORM 1A 5V 500 OHMS	087050
K11	RELAY REED FORM 1A 5V 500 OHMS	087050
K12	RELAY REED FORM 1A 5V 500 OHMS	087050
K13	RELAY REED FORM 1A 5V 500 OHMS	087050
K16	RELAY REED FORM 1C 5V 125 OHM	087056
K17	RELAY REED FORM 1C 5V 125 OHM	087056
K18	RELAY REED FORM 1A 5V 500 OHMS	087050
K19	RELAY REED FORM 1A 5V 500 OHMS	087050
K20	RELAY REED FORM 1A 5V 500 OHMS	087050
K21	RELAY REED FORM 1A 5V 500 OHMS	087050
Q1	TRANSISTOR NPN	132223
Q2	TRANSISTOR NPN	132257
Q3	TRANSISTOR NPN	132257
Q4	TRANSISTOR PNP	132224
R1	RES MF 1K 1% 1/4W	144090
R2	RES MF 1K 1% 1/4W	144090
R3	RES MF 47.5K 1% 1/4W	144108
R4	RES MF 47.5K 1% 1/4W	144108
R5	RES MF 953 OHM 1/4W 1%	144473
R6	RES MF 1.74K 1% 1/4W	144351
R7	RES MF 953 OHM 1/4W 1%	144473
R8	RES MF 1.74K 1% 1/4W	144351
R9	RES MF 221K 1% 1/4W	144421
R10	RES MF 221K 1% 1/4W	144421
R11	RES MF 75K 1% 1/4W	144156
R12	RES MF 75K 1% 1/4W	144156
R13	RES MF 1M 1/4W	144269
R14	RES MF 1M 1/4W	144269
R15	RES MF 681 OHM 1% 1/4W	144195
R16	RES MF 681 OHM 1% 1/4W	144195
R17	RES MF 150K 1% 1/4W	144419
R18	RES MF 150K 1% 1/4W	144419
R19	RES MF 1M 1/4W	144269
R20	RES MF 1M 1/4W	144269
R21	RES MF 221K 1% 1/4W	144421
R22	RES MF 221K 1% 1/4W	144421
R23	RES MF 2.21K 1% 1/4W	144298
R24	RES MF 100 OHM 1% 1/4W	144196
R25	RES MF 22.1K 1% 1/4W	144187
R26	RES MF 22.1K 1% 1/4W	144187
R27	RES MF 200K 1% 1/4W	144117
R28	RES NETWORK 2X220K ISO	144262
R29	RES NETWORK 2X220K ISO	144262
R30	RES MF 100 OHM 1% 1/4W	144196
R31	RES NETWORK 2X220K ISO	144262
R32	RES NETWORK 2X220K ISO	144262
R33	RES MF 221K 1% 1/4W	144421
R34	RES MF 221K 1% 1/4W	144421
R35	RES MF 1K 1% 1/4W	144090
R36	RES MF 47.5K 1% 1/4W	144108
R37	RES MF 47.5K 1% 1/4W	144108
R38	RES MF 1K 1% 1/4W	144090
R39	RES MF 47.5K 1% 1/4W	144108
R40	RES MF 47.5K 1% 1/4W	144108
R41	RES MF 24.9K 1% 1/4W	144439
R42	RES MF 24.9K 1% 1/4W	144439
R43	RES MF 200K 1% 1/4W	144117
R44	RES MF 22.1K 1% 1/4W	144187
R45	RES MF 22.1K 1% 1/4W	144187
R46	RES MF 100K 1% 1/4W	144113
R47	RES MF 1K 1% 1/4W	144090
R48	RES MF 1K 1% 1/4W	144090
R49	RES NETWORK 2X220K ISO	144262
R50	RES MF 221 OHM 1% 1/4W	144172
R51	RES MF 221 OHM 1% 1/4W	144172
R52	RES MF 100K 1% 1/4W	144113
R53	RES MF 2.74K 1% 1/4W	144304
R54	RES MF 2.74K 1% 1/4W	144304
R55	RES MF 2.74K 1% 1/4W	144304
R56	RES MF 2.74K 1% 1/4W	144304
R57	RES MF 221K 1% 1/4W	144421
R58	RES MF 221K 1% 1/4W	144421
R59	RES MF 2.21M 1/4W	144265
R60	RES MF 2.21M 1/4W	144265
R61	RES MF 13.7K 1% 1/4W	144342
R62	RES MF 13.7K 1% 1/4W	144342
R63	RES MF 1.5K 1% 1/4W	144128
R64	RES MF 1.5K 1% 1/4W	144128
R65	RES MF 200K 1% 1/4W	144117
R66	RES MF 200K 1% 1/4W	144117
R67	RES MF 10K 1% 1/4W	144053
R68	RES MF 10K 1% 1/4W	144053
R69	RES MF 100K 1% 1/4W	144113
R70	RES MF 100K 1% 1/4W	144113
R71	RES MF 33.2K 1% 1/4W	144015
R72	RES MF 2.74K 1% 1/4W	144304
R73	RES MF 2.74K 1% 1/4W	144304
R74	RES MF 100K 1% 1/4W	144113
R75	RES MF 221K 1% 1/4W	144421
R76	RES MF 10K 1% 1/4W	144053
R77	RES MF 100 OHM 1% 1/4W	144196
R78	RES MF 100 OHM 1% 1/4W	144196
R79	RES MF 33.2K 1% 1/4W	144015
R80	RES MF 33.2K 1% 1/4W	144015
R81	RES MF 221 OHM 1% 1/4W	144172
R82	RES MF 33.2K 1% 1/4W	144015
R83	RES MF 221 OHM 1% 1/4W	144172
R84	RES MF 33.2K 1% 1/4W	144015
R85	RES MF 221 OHM 1% 1/4W	144172
R86	RES MF 1K 1% 1/4W	144090
R87	RES MF 221 OHM 1% 1/4W	144172
R88	RES MF 10K 1% 1/4W	144053
R89	RES MF 40.2K 1% 1/4W	144107
R90	RES MF 40.2K 1% 1/4W	144107
R91	RES MF 4.75 MEG 1% 1/2W	144366
R92	RES MF 1K 1% 1/4W	144090
R93	RES MF 1K 1% 1/4W	144090
R94	RES MF 1K 1% 1/4W	144090
R95	RES MF 2.21K 1% 1/4W	144298
R96	RES MF 2.21K 1% 1/4W	144298
U1	IC OCTAL DARLNGTON TRANS ARRAY	133258
U2	IC OCTAL DARLNGTON TRANS ARRAY	133258
U3	IC DUAL OPERATIONAL AMPLIFIER	133260
U4	IC SHFT REG SER-PAR	133186
U5	IC SHFT REG SER-PAR	133186
U6	IC DUAL OPERATIONAL AMPLIFIER	133260
U7	IC AND 2 INPUT X 4	133175
U8	IC DUAL OPERATIONAL AMPLIFIER	133260
U9	IC DUAL OPERATIONAL AMPLIFIER	133260
U10	IC REGULATOR +5V	133108
U11	IC DUAL OPERATIONAL AMPLIFIER	133260
V4	TUBE 12AX7A MCINTOSH	165065
V5	TUBE 12AX7A MCINTOSH	165065
V6	TUBE 12AX7A MCINTOSH	165065
V7	TUBE 12AX7A MCINTOSH	165065
3	**049966 CONTROL PCB**	
C1	CAP ELECT 47UF 35V	066446
C2	CAP MONO .1uF 50V 20% Z5U	061305
C3	CAP MONO 220PF 100V 10% NPO	061301
C4	CAP MONO .1uF 50V 20% Z5U	061305
C5	CAP ELECT 10UF 50V	066445
DS1	LED GREEN 5MM HI-INTENSITY	058165
DS2	LED GREEN 5MM HI-INTENSITY	058165

PARTS LIST con't

DS4	LED GREEN 5MM HI-INTENSITY	058165
DS5	LED GREEN 5MM HI-INTENSITY	058165
DS6	LED GREEN 5MM HI-INTENSITY	058165
DS7	LED GREEN 5MM HI-INTENSITY	058165
DS9	LED SQUARE RED	058109
DS10	LED SQUARE RED	058109
DS11	LED SQUARE RED	058109
DS12	LED SQUARE RED	058109
DS13	LED SQUARE RED	058109
DS14	LED SQUARE RED	058109
DS15	LED GREEN 5MM HI-INTENSITY	058165
J1	CONN FFC 18PIN	117765
J2	CONN FFC 18PIN	117765
J3	CONN 12 PIN FFC	117720
Q1	TRANSISTOR NPN SILICON	132171
Q2	TRANSISTOR NPN	132223
R1	RES MF 10K 1% 1/4W	144053
R2	RES MF 10 OHM 1% 1/4W	144157
R3	RES NET 10K X8 RES B	144253
R4	RES NETWORK 9X-1-223	144238
R5	RES MF 301 OHM 1% 1/4W	144484
R6	RES MF 301 OHM 1% 1/4W	144484
R7	RES MF 806 OHM 1% 1/4W	144089
R8	RES MF 10K 1% 1/4W	144053
R9	RES MF 324 OHM 1% 1/4W	144338
R10	RES MF 2.21K 1% 1/4W	144298
R11	RES MF 324 OHM 1% 1/4W	144338
R12	RES MF 324 OHM 1% 1/4W	144338
R13	RES MF 324 OHM 1% 1/4W	144338
R15	RES NETWORK 9X-1-223	144238
R16	RES MF 1K 1% 1/4W	144090
R17	RES MF 6.49K 1% 1/4W	144140
R18	RES MF 240 OHM 1% 1/4W	144338
R19	RES MF 240 OHM 1% 1/4W	144338
R20	RES MF 240 OHM 1% 1/4W	144338
R21	RES MF 240 OHM 1% 1/4W	144338
R22	RES MF 100K 1% 1/4W	144113
R23	RES MF 240 OHM 1% 1/4W	144338
R24	RES MF 240 OHM 1% 1/4W	144338
S1	PC BD SWITCH	129294
U1	IC SUPERVISOR WITH EEPROM	133468
U2	IC PROGRAMMED MC2275 V1.00	133523
U3	IC SHFT REG SER-PAR	133186
U4	IC SHFT REG SER-PAR	133186
U5	IC AND 2 INPUT X 4	133175
Y1	RESONATOR CERAMIC 6.0MHZ W/CAP	180039

4 049967 BALANCED PCB

C1	CAP ELECT 10UF 50V	066445
C2	CAP ELECT 10UF 50V	066445
C3	CAP ELECT 10UF 50V	066445
C4	CAP ELECT 10UF 50V	066445
C5	CAP ELECT 10UF 50V	066445
C6	CAP ELECT 10UF 50V	066445
C7	CAP ELECT 10UF 50V	066445
C8	CAP ELECT 10UF 50V	066445
D1	DIODE SILICON	070047
J1	XLR FEMALE VERTICAL WITH LATCH	117813
J2	XLR FEMALE VERTICAL WITH LATCH	117813
J3	CONN 12 PIN FFC	117720
K1	RELAY REED FORM 1A 5V 500 OHMS	087050
K2	RELAY REED FORM 1A 5V 500 OHMS	087050
K3	RELAY REED FORM 1A 5V 500 OHMS	087050
K4	RELAY REED FORM 1A 5V 500 OHMS	087050
R1	RES NETWORK 2X220K ISO	144262
R2	RES NETWORK 2X220K ISO	144262
R3	RES NETWORK 2X220K ISO	144262
R4	RES NETWORK 2X220K ISO	144262

5 049968 VOLUME/TONE PCB

C1	CAP ELECT 10UF 50V	066445
C2	CAP ELECT 47UF 35V	066446
C3	CAP MONO 100PF 100V 10% NPO	061300
C4	CAP MONO 100PF 100V 10% NPO	061300
C5	CAP MONO .1uF 50V 20% Z5U	061305
C6	CAP MONO .1uF 50V 20% Z5U	061305
C7	CAP ELECT 10UF 50V	066445
C8	CAP ELECT 47UF 35V	066446
C9	CAP MONO 100PF 100V 10% NPO	061300
C10	CAP MONO 100PF 100V 10% NPO	061300
C11	CAP ELECT 220UF 50V 20%	066254
C12	CAP ELECT 47UF 10V BP	066378
C13	CAP ELECT 22UF 100V	066506
C14	CAP MPF 0.033UF 5% 63VDC	064318
C15	CAP MONO .1uF 50V 20% Z5U	061305
C16	CAP MONO .1uF 50V 20% Z5U	061305
C17	CAP MPF 0.033UF 5% 63VDC	064318
C18	CAP ELECT 22UF 100V	066506
C19	CAP MPF 0.033UF 5% 63VDC	064318
C20	CAP MPF 0.033UF 5% 63VDC	064318
C42	CAP ELECT 220UF 25V	066507
D1	DIODE SILICON	070047
J1	CONN 23 PIN FFC	117715
K1	RELAY REED FORM 1A 5V 500 OHMS	087050
K2	RELAY REED FORM 1A 5V 500 OHMS	087050
K3	RELAY REED FORM 1A 5V 500 OHMS	087050
K4	RELAY REED FORM 1A 5V 500 OHMS	087050
R1	POT 50KAX2	134490
R2	RES MF 1K 1% 1/4W	144090
R3	RES MF 3.32K 1% 1/4W	144095
R4	POT BALANCE 2KOHM	134464
R5	RES MF 475K 1% 1/4W	144364
R6	RES MF 1K 1% 1/4W	144090
R7	RES MF 475K 1% 1/4W	144364
R8	RES MF 3.32K 1% 1/4W	144095
R9	RES MF 10 OHM 1% 1/4W	144157
R10	RES MF 10 OHM 1% 1/4W	144157
R11	RES MF 10 OHM 1% 1/4W	144157
R12	RES MF 10 OHM 1% 1/4W	144157
R13	RES MF 681 OHM 1% 1/4W	144195
R14	RES MF 1M 1/4W	144269
R15	RES MF 100K 1% 1/4W	144113
R16	RES MF 475 OHM 1% 1/4W	144086
R17	POTENTIOMETER	134457
R18	POTENTIOMETER	134457
R19	RES MF 1M 1/4W	144269
R20	RES MF 681 OHM 1% 1/4W	144195
R21	RES MF 1M 1/4W	144269
R22	RES MF 100K 1% 1/4W	144113
R23	RES MF 475 OHM 1% 1/4W	144086
R24	RES MF 1M 1/4W	144269
R25	RES MF 1K 1% 1/4W	144090
R26	RES MF 1K 1% 1/4W	144090
R53	RES MF 10 OHM 1% 1/4W	144157
U1	IC DUAL OPERATIONAL AMPLIFIER	133260
U2	IC OPAMP NE4558N	133028

U7	IC DC MOTOR DRIVER	133191

6 049969 DATA PCB

C1	CAP MONO .1uF 50V 20% Z5U	061305
C2	CAP MONO 1000PF 50V 10% NPO	061303
C3	CAP MONO .1uF 50V 20% Z5U	061305
C4	CAP MONO .1uF 50V 20% Z5U	061305
C5	CAP MONO 220PF 100V 10% NPO	061301
D1	DIODE SILICON	070047
D2	DIODE SILICON	070047
D3	DIODE SILICON	070047
J1	JACK HEADPHONE STEREO 1/8IN	117759
J2	JACK HEADPHONE STEREO 1/8IN	117759
J3	JACK HEADPHONE STEREO 1/8IN	117759
J4	JACK HEADPHONE STEREO 1/8IN	117759
J5	JACK HEADPHONE STEREO 1/8IN	117759
J6	JACK HEADPHONE STEREO 1/8IN	117759
J7	JACK HEADPHONE STEREO 1/8IN	117759
J8	CONN 12 PIN FFC	117720
J9	CONN GOLD F RIGHT ANGLE	117661
J10	JACK HEADPHONE STEREO 1/8IN	117759
J11	JACK HEADPHONE STEREO 1/8IN	117759
R1	RES MF 100 OHM 1% 1/4W	144196
R2	RES MF 100 OHM 1% 1/4W	144196
R3	RES MF 1K 1% 1/4W	144090
R4	RES MF 100 OHM 1% 1/4W	144196
R5	RES MF 1K 1% 1/4W	144090
R6	RES MF 1K 1% 1/4W	144090
R7	RES MF 100 OHM 1% 1/4W	144196
R8	RES MF 100 OHM 1% 1/4W	144196
R9	RES MF 100 OHM 1% 1/4W	144196
R10	RES MF 100 OHM 1% 1/4W	144196
R11	RES MF 1K 1% 1/4W	144090
R12	RES MF 10 OHM 1% 1/4W	144157
R13	RES MF 221 OHM 1% 1/4W	144172
R14	RES MF 61.9K OHM 1/4W	144335
R15	RES MF 10 OHM 1% 1/4W	144157
R16	RES MF 22.1K 1% 1/4W	144187
R17	RES MF 182 OHM 1/4W 1%	144273
R18	RES MF 182 OHM 1/4W 1%	144273
R19	RES MF 2.21K 1% 1/4W	144298
R20	RES MF 182 OHM 1/4W 1%	144273
R21	RES MF 182 OHM 1/4W 1%	144273
R22	RES MF 2.21K 1% 1/4W	144298
R23	RES MF 2.21K 1% 1/4W	144298
SP1	BRACKET PCB CARD MOUNTING	003611
SP2	BRACKET PCB CARD MOUNTING	003611
U1	IC SHFT REG SER-PAR	133186
U2	IC 8 LN DRIVER ARRAY	133180
U3	IC OPERATIONAL AMPLIFIER	133189
U4	IC AND 2 INPUT X 4	133175

7 049970 PUSHBUTTON PCB

C1	CAP MONO .1uF 50V 20% Z5U	061305
C2	CAP ELECT 47UF 16V 6.3X5 CASE	066380
DS1	LED SQUARE RED	058109
DS2	LED SQUARE RED	058109
DS3	LED SQUARE RED	058109
DS4	LED SQUARE RED	058109
DS5	LED SQUARE RED	058109
DS8	LED ARRAY(4) YELLOW SQUARE	058126
J1	CONN FFC 18PIN	117765
J2	JACK PHONO 1/8 STEREO VER	117462
MT1	SENSOR IR 38KHZ	121046
R1	RES MF 324 OHM 1% 1/4W	144338
R2	RES MF 100 OHM 1% 1/4W	144196
R14	RES MF 499 1% 1/4W	144087
S1	SWITCH PB TACT	150058
S2	SWITCH PB TACT	150058
S3	SWITCH PB TACT	150058
S4	SWITCH PB TACT	150058
S5	SWITCH PB TACT	150058

8 049971 AMPLIFIER PCB

C1	CAP MONO 220PF 100V 10% NPO	061301
C2	CAP ELECT 470UF 16V	066508
C3	CAP MONO .1uF 50V 20% Z5U	061305
C4	CAP MONO .1uF 50V 20% Z5U	061305
C5	CAP POLYPROP 0.22UF 20% 1KVDC	064432
C6	CAP POLYPROP 0.22UF 20% 1KVDC	064432
C7	CAP MONO 100PF 100V 10% NPO	061300
C8	CAP MONO 100PF 100V 10% NPO	061300
C10	CAP ELECT 470UF 16V	066508
C11	CAP ELECT 10UF 50V	066445
F1	FUSE T 0.4A 250V	089108
J1	CONN 12 PIN FFC	117720
J2	BLADE FASTON W/FEET	117708
J3	BLADE FASTON W/FEET	117708
J4	BLADE FASTON W/FEET	117708
J5	BLADE FASTON W/FEET	117708
J6	BLADE FASTON W/FEET	117708
J7	CONN PCB MOUNT POWER RED	117719
J9	BLADE FASTON W/FEET	117708
L1	CHOKE 2.2mH	122001
L2	CHOKE 2.2mH	122001
Q2	TRANSISTOR N JFET	132222
Q3	TRANSISTOR NPN	132136
Q4	TRANSISTOR NPN	132136
Q5	TRANSISTOR NPN	132136
Q6	TRANSISTOR NPN	132136
Q7	TRANSISTOR N JFET	132222
Q8	TRANSISTOR N JFET	132222
Q9	TRANSISTOR N JFET	132222
R5	RES MF 2.21M 1/4W	144265
R6	RES MF 10K 1% 1/4W	144053
R7	RES MF 1.82K 1% 1/4W	144296
R8	RES MF 40.2K 1% 1/4W	144107
R9	RES MF 10K 1% 1/4W	144053
R10	RES MF 2.21M 1/4W	144265
R11	RES MF 2.74K 1% 1/4W	144304
R12	RES MO 46.4k 1% 1W	144436
R13	RES MO 46.4k 1% 1W	144436
R14	RES MF 10K 1% 1/4W	144053
R15	RES MF 121K 1% 1/4W	144418
R16	RES MF 47.5K 1% 1/4W	144108
R17	RES MF 1K 1% 1/4W	144090
R19	RES MF 1M 1/4W	144269
R20	RES MF 1M 1/4W	144269
R21	RES MF 332k 1% .5W	144355
R22	RES MO 100K 5% 2W	144438
R23	RES MO 100K 5% 2W	144438
R24	RES MO 100K 5% 2W	144438
R25	RES MO 100K 5% 2W	144438
R27	RES WW 220 OHM 10% 5W	139009
R28	RES WW 220 OHM 10% 5W	139009
R30	RES MF 17.4K 1% 1/4W	144413

PARTS LIST con't

R31	RES MF 332k 1% .5W	144355
R32	RES MF 2.74K 1% 1/4W	144304
R33	RES MF 10K 1% 1/4W	144053
R34	RES MF 2.21M 1/4W	144265
R35	RES MF 2.21M 1/4W	144265
R36	RES MF 2.74K 1% 1/4W	144304
R37	RES MF 2.74K 1% 1/4W	144304
U1	IC DUAL OPERATIONAL AMPLIFIER	133260
V1	TUBE 12AT7	165067
V2	TUBE KT88	165069
V3	TUBE KT88	165069

9 **049972 POWER SUPPLY PCB**

C1	CAP MONO .47uF 50V	061249
C2	CAP POLY .047UF 10% 1000VDC	064434
C3	CAP ELECT 680UF 315V	066549
C4	CAP ELECT 680UF 315V	066549
C5	CAP ELECT 47UF 450V	066497
C6	CAP ELECT 33UF 500V	066542
C7	CAP ELECT 47UF 450V	066497
C8	CAP ELECT 1UF 50V	066510
C9	CAP ELECT 680UF 315V	066549
C10	CAP ELECT 680UF 315V	066549
C11	CAP ELECT 4700UF 35V	066541
C12	CAP ELECT 10UF 50V	066445
C13	CAP POLYPROP .047UF 10% 250VDC	064364
C14	CAP ELECT 4700UF 35V	066541
C15	CAP ELECT 10UF 50V	066445
D1	DIODE BRID RECT 1000V 6A	070165
D2	DIODE ZENER 150V	070170
D3	DIODE ZENER 150V	070170
D4	DIODE RECTIFIER 1N4007	070169
D5	DIODE RECTIFIER 1N4007	070169
D6	DIODE SIL 400 PIV @ 1.5A	070031
D7	DIODE SIL 400 PIV @ 1.5A	070031
D8	DIODE SIL 400 PIV @ 1.5A	070031
D9	DIODE SIL 400 PIV @ 1.5A	070031
D10	DIODE SILICON	070047
F1	FUSE 2A 250V SLO-BLO 5X20 IEC	089088
F2	FUSE 2A 250V SLO-BLO 5X20 IEC	089088
GP1	BRACKET PCB CARD MOUNTING	003611
GP2	BRACKET PCB CARD MOUNTING	003611
J1	BLADE FASTON .187	117726
J2	BLADE FASTON .187	117726
J3	BLADE FASTON W/FEET	117708
J4	BLADE FASTON W/FEET	117708
J5	BLADE FASTON W/FEET	117708
J6	BLADE FASTON W/FEET	117708
J7	BLADE FASTON W/FEET	117708
J8	BLADE FASTON W/FEET	117708
J9	BLADE FASTON W/FEET	117708
J10	BLADE FASTON W/FEET	117708
J11	CONN 12 PIN FFC	117720
J12	BLADE FASTON W/FEET	117708
J13	BLADE FASTON W/FEET	117708
J14	BLADE FASTON W/FEET	117708
J16	CONN PCB MOUNT POWER RED	117719
J17	CONN PCB MOUNT POWER RED	117719
J18	HEADER 9 CIRCUIT POST NATURAL	117724
Q1	TRANSISTOR: NPN POWER	132295
Q2	TRANSISTOR NPN	132223
Q3	TRANSISTOR PNP	132224
Q6	TRANSISTOR P FET 1-4PO 250 OHM	132220

R1	RES MO 18K 5% 1W	144286
R2	RES MO 100K 5% 2W	144438
R4	RES MF 2.74M 1/4W	144271
R5	RES MF 100K 1% 1/4W	144113
R6	RES MF 100K 1% 1/4W	144113
R7	RES MF 1M 1/4W	144269
R8	RES MF 221K 1% 1/4W	144421
R9	RES MF 100K 1% 1/4W	144113
R10	RES MO 2.2K 5% 2W	144494
R75	RES MO 100K 5% 2W	144438
R76	RES MO 100K 5% 2W	144438
U2	IC REGULATOR 15V	133154
U3	IC REGULATOR -15V	133153

10 **049973 METER PCB**

C1	CAP MONO .1uF 50V 20% Z5U	061305
C2	CAP MONO .1uF 50V 20% Z5U	061305
C3	CAP MONO .1uF 50V 20% Z5U	061305
C4	CAP ELECT 100UF 25V	066161
C5	CAP MPF 0.1UF 100V	064337
C6	CAP MPF 0.22UF 5% 63VDC	064329
C7	CAP MPF 0.1UF 100V	064337
C8	CAP MPF 0.22UF 5% 63VDC	064329
C9	CAP ELECT 2.2UF 50V	066511
C10	CAP ELECT 2.2UF 50V	066511
D1	DIODE ZENER 5V	070132
D2	DIODE SILICON	070047
D3	DIODE SILICON	070047
D4	DIODE SILICON	070047
D5	DIODE SILICON	070047
D6	DIODE SILICON	070047
D7	DIODE SILICON	070047
D8	DIODE SILICON	070047
D9	DIODE SILICON	070047
D10	DIODE SILICON	070047
D11	DIODE SILICON	070047
D12	DIODE SILICON	070047
D13	DIODE SILICON	070047
DS1	LED BLUE 5MM HI-INTENSITY	058166
DS2	LED GREEN 5MM HI-INTENSITY	058165
DS3	LED BLUE 5MM HI-INTENSITY	058166
DS4	LED GREEN 5MM HI-INTENSITY	058165
DS5	LED BLUE 5MM HI-INTENSITY	058166
DS6	LED GREEN 5MM HI-INTENSITY	058165
DS7	LED BLUE 5MM HI-INTENSITY	058166
DS8	LED GREEN 5MM HI-INTENSITY	058165
J2	BLADE FASTON W/FEET	117708
J3	CONN 12 PIN FFC	117720
J4	CONN 3 POS MALE MTS100 NORMAL	117214
J5	HEADER 2 PIN LATCHING	117766
J6	HEADER 2 PIN LATCHING	117766
J7	BLADE FASTON W/FEET	117708
Q1	TRANSISTOR NPN	132223
Q2	TRANSISTOR NPN	132223
Q3	TRANSISTOR NPN	132254
Q4	TRANSISTOR NPN	132254
Q5	TRANSISTOR NPN	132254
Q6	TRANSISTOR NPN	132254
Q7	TRANSISTOR NPN	132223
Q8	TRANSISTOR NPN	132223
Q9	TRANSISTOR NPN	132223
R1	RES MF 475 OHM 1% 1/4W	144086
R2	RES MF 10 OHM 1% 1/4W	144157

R3	RES MF 22.1K 1% 1/4W	144187
R4	RES MF 22.1K 1% 1/4W	144187
R5	RES MF 68.1K 1% 1/4W	144081
R6	RES MF 68.1K 1% 1/4W	144081
R7	RES MF 10.2K 1% 1/4W	144130
R8	RES MF 10.2K 1% 1/4W	144130
R9	RES MF 10M 1% 1/4W	144264
R10	RES MF 121K 1% 1/4W	144418
R11	RES MF 10M 1% 1/4W	144264
R12	RES MF 121K 1% 1/4W	144418
R13	POT TRIM 100K OHM 20%	134383
R14	POT TRIM 100K OHM 20%	134383
R15	RES MF 100 OHM 1% 1/4W	144196
R16	RES MF 100 OHM 1% 1/4W	144196
R17	RES MF 221K 1% 1/4W	144421
R18	RES MF 2.21M 1/4W	144265
R19	RES MF 2.21M 1/4W	144265
R20	RES MF 187K 1% 1/4W	144406
R21	RES MF 187K 1% 1/4W	144406
R22	RES MF 4.75K 1% 1/4W	144097
R23	RES MF 1.21K 1% 1/4W	144191
R24	RES MF 10K 1% 1/4W	144053
R25	RES MF 4.75K 1% 1/4W	144097
R26	RES MF 1.21K 1% 1/4W	144191
R27	RES MF 10K 1% 1/4W	144053
R28	POT TRIM 500 OHM 20% HORIZ ADJ	134410
R29	POT TRIM 500 OHM 20% HORIZ ADJ	134410
R30	POT TRIM 500 OHM 20% HORIZ ADJ	134410
R31	POT TRIM 500 OHM 20% HORIZ ADJ	134410
R32	RES MF 221 OHM 1% 1/4W	144172
R33	RES MF 221 OHM 1% 1/4W	144172
R34	RES MF 221 OHM 1% 1/4W	144172
R35	RES MF 221 OHM 1% 1/4W	144172
U1	IC DUAL OPERATIONAL AMPLIFIER	133260
U2	IC DUAL OPERATIONAL AMPLIFIER	133260

11 **050007 BACKUP POWER SUPPLY PCB**

C2	CAP ELECT 4700UF 35V	066541
D1	DIODE SILICON	070047
D2	DIODE SIL 400 PIV @ 1.5A	070031
D3	DIODE SIL 400 PIV @ 1.5A	070031
D4	DIODE SIL 400 PIV @ 1.5A	070031
D5	DIODE SIL 400 PIV @ 1.5A	070031
F1	FUSE 1A 250V SB 5X20 IEC	089107
J1	BLADE FASTON W/FEET	117708
J2	BLADE FASTON W/FEET	117708
J3	BLADE FASTON W/FEET	117708
J4	BLADE FASTON W/FEET	117708
J5	BLADE FASTON W/FEET	117708
J6	BLADE FASTON W/FEET	117708
J7	BLADE FASTON W/FEET	117708
J8	BLADE FASTON W/FEET	117708
J9	BLADE FASTON W/FEET	117708
J10	BLADE FASTON W/FEET	117708
J11	CONN 12 PIN FFC	117720
J12	BLADE FASTON W/FEET	117708
J13	BLADE FASTON W/FEET	117708
J14	BLADE FASTON W/FEET	117708
J15	BLADE FASTON W/FEET	117708
J16	BLADE FASTON W/FEET	117708
J17	BLADE FASTON W/FEET	117708
J18	BLADE FASTON W/FEET	117708
K1	RELAY POWER TV5 12V	087070

K2	RELAY POWER TV5 12V	087070
Q1	TRANSISTOR NPN	132223
R1	RES MF 2.21K 1% 1/4W	144298
R2	RES MF 10 OHM 1% 1/4W	144157
RT1	THERMISTER 5 OHM	144151
T1	TRANSFORMER LOW PROFILE	159342
TP1	CONN 4 PIN	117215
TP2	CONN 4 PIN	117215

12 13 **050052 TERMINAL PCB**

C1	CAP MPF 0.22UF 400VDC	064438
C2	CAP MPF 0.22UF 400VDC	064438
J1	HEADER 4 CIRCUIT POST	117772
J2	HEADER 4 CIRCUIT POST	117772
R1	RES WW 4 OHM 5% 5W	139119
R2	RES WW 4 OHM 5% 5W	139119

EXPLODED VIEW and PARTS LIST

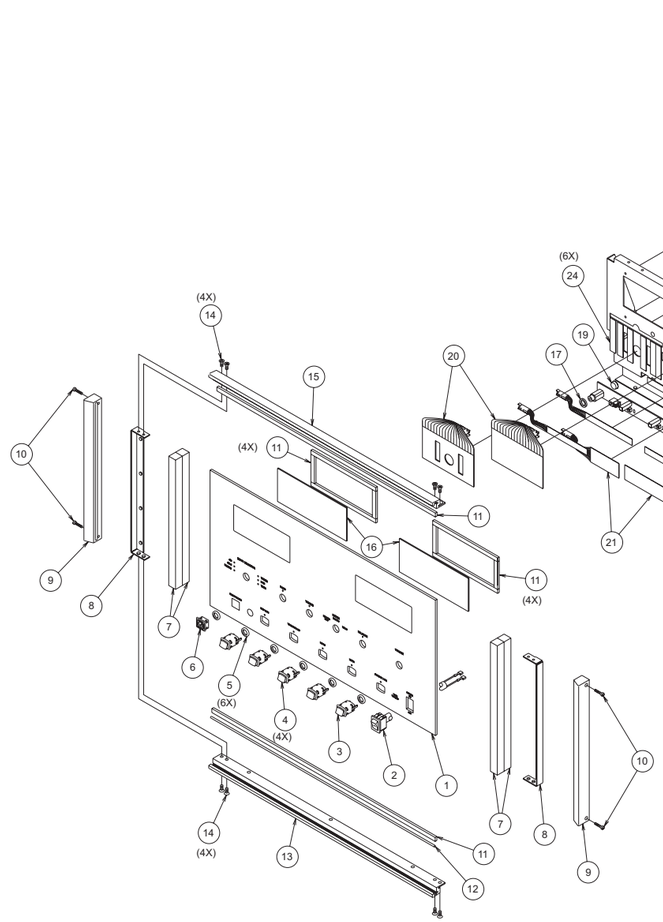

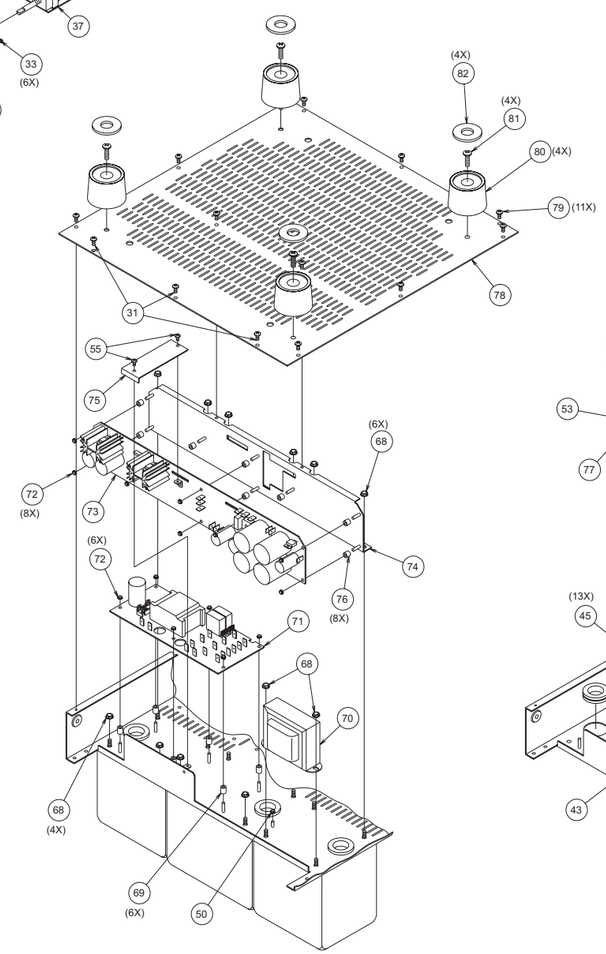

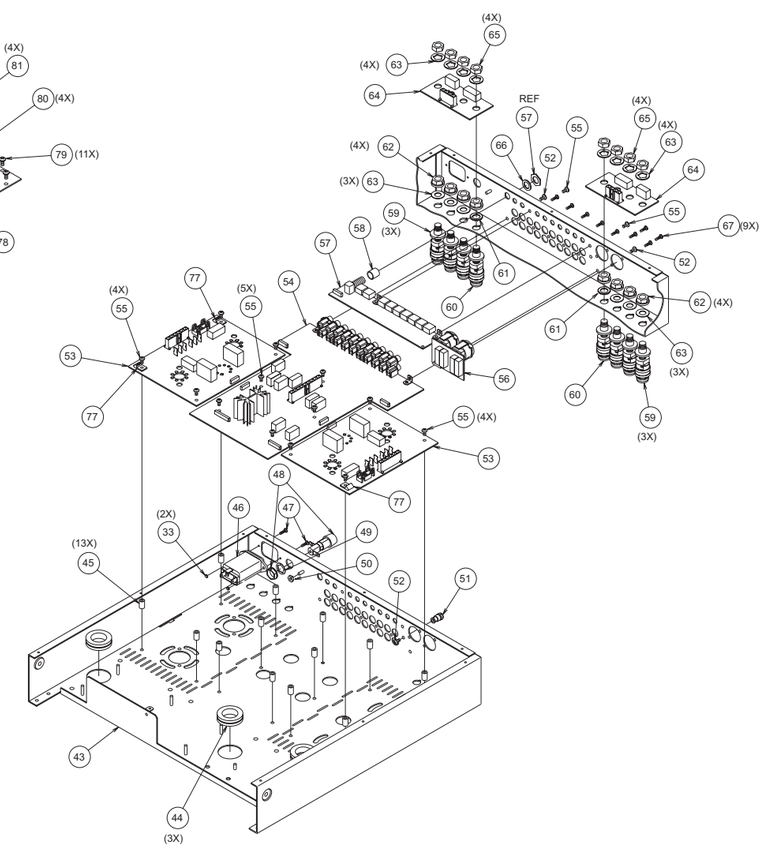

EXPLODED VIEW con’t and PARTS LIST

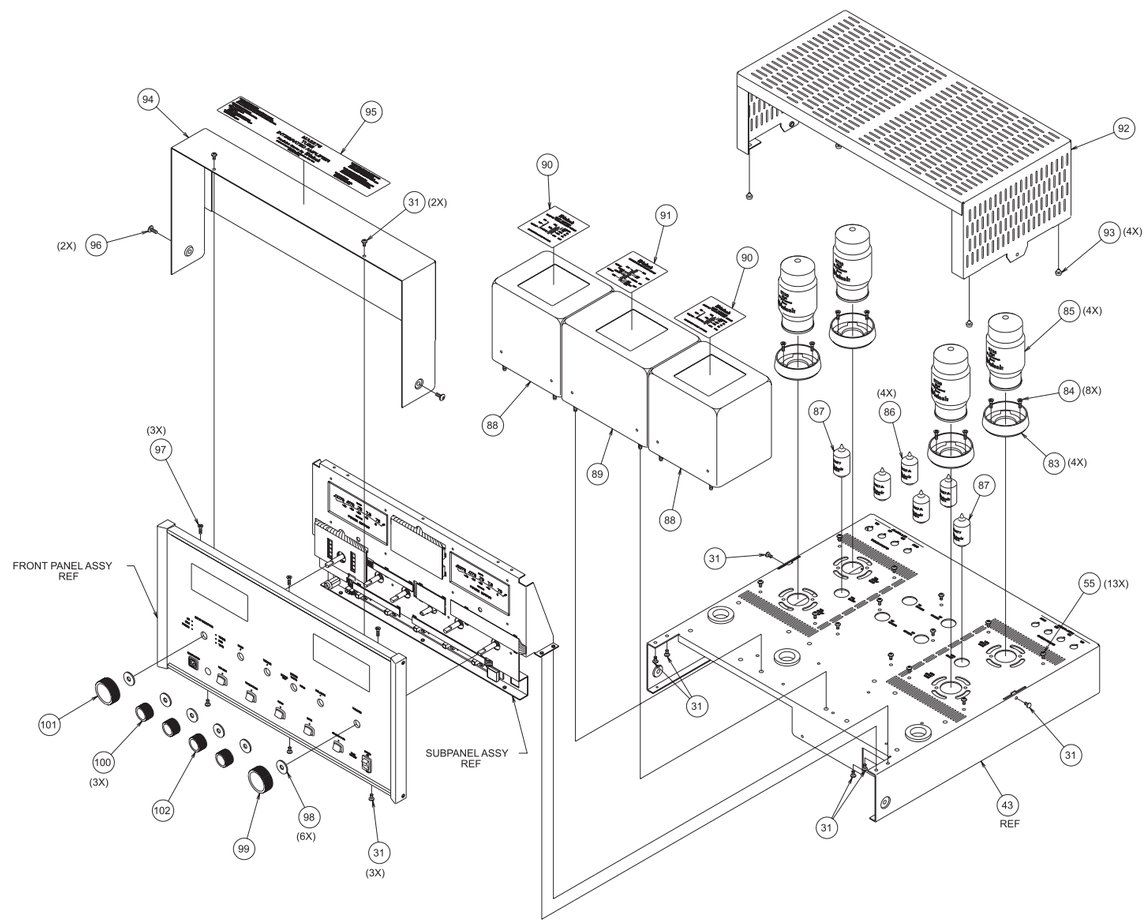

Ref No.	Part No.	Description
1	016495	GLASS
2	171026	CABLE ASSY POWER SWITCH
3	017531	PUSHBUTTON ASSY RED
4	017517	PUSHBUTTON ASSY BLK
5	078033	O-RING
6	017854	BEZEL HEADPHONE
7	094360	TAPE FOAM 1/2 X 1/2
8	004939	BRACKET EXTRUSION
9	018515	END CAP 9”
10	101042	SCREW TS 4-40 X 1/2 SLOT FILL
11	094016	TAPE FOAM 1/4 X 1/8
12	098113	CORD DIAL .027 BLK BRAID SILK
13	018706	EXTRUSION BOTTOM
14	100149	SCREW MACH 6-32 X 1/4 FL U/H ST
15	018738	EXTRUSION TOP
16	092443	FILTER METER
17	078037	O-RING
18	049970	ASSY PUSHBUTTON PCB
19	017191	BUMPER BUTTON
20	017921	LOGO/SELECTOR BACKLIGHT
21	017901	LOGO/ PUSHBUTTON BACKLIGHT
22	017907	TITLE/PUSHBUTTON BACKLIGHT
23	094431	TAPE FOAM WHT 3/8W X 1/32 THK
24	094430	TAPE FOAM WHT 1/2 W X 1/8 THK
25	005347	SUBPANEL
26	049966	ASSY CONTROL PCB
27	110004	NUT CONTROL M7 X 0.75 HEX
28	104013	WASHER LOCK 5/16 X .435 X .002
29	110002	NUT CONTROL M9 X 0.75 PLATED
30	104014	WASHER INT STAR 3/8 X .507 X .002
31	101054	SCREW TAPTITE 6-32 X 1/4 PH PN BLK
32	112060	SPACER 4 X 5/16 STEEL
33	102001	NUT KEP 4-40 CADMIUM PLATE
34	005390	SWITCH PLATE
35	021159	BUSHING SWITCH
36	146243	SWITCH POWER
37	049968	ASSY VOLUME/TONE PCB
38	124087	METER MA2275
39	017922	METER BACKLIGHT
40	005391	METER PLATE
41	049973	ASSY METER PCB
42	112038	SPACER STEEL 4 X 3/8 NICKEL PLATE
43	005346	CHASSIS
44	078031	GROMMET RUBBER 1” ID
45	017895	SPACER NYLON 6-32 X 7/16
46	117755	RECEPTACLE INPUT & LINE FILTER
47	100178	SCREW MACH 4-40 X 3/8 PH PN
48	178161	HOLDER FUSE 5 X 20mm IEC
49	104016	WASHER INT STAR .5 X .630 X .022
50	102003	NUT MACH 6-32 W/LOCK
51	084112	POST GROUND GOLD
52	100250	SCREW MACH SEMS 6-32 X 1/4 PH PN
53	049971	ASSY AMP PCB
54	049954	ASSY MAIN PCB
55	100157	SCREW MACH 6-32 X 1/4 PH PN
56	049967	ASSY BALANCED PCB
57	049969	ASSY DATA PCB
58	017673	SPACER .380 ID X 3/8 L PHENOLIC
59	117740	POST BINDING RED
60	117741	POST BINDING BLK
61	104178	WASHER LOCK M10 EXT STAINLESS
62	102052	NUT GOLD SUPPLIED W/117758
63	104162	WASHER LOCK INTERNAL TOOTH
64	050052	ASSY TERMINAL PCB
65	102051	NUT HEX M9 X 0.75 GOLD PLATED
66	104014	WASHER INT STAR 3/8 X .507 X .002
67	101197	SCREW HI/LO 4-24 X 3/8 PH RD BLK
68	102006	NUT MACH 10-32 W/LOCK
69	021092	SPACER 6 X 5/16
70	122379	CHOKE FILTER
71	050007	ASSY BACKUP POWER SUPPLY PCB
72	102045	NUT KEP 6-32 SPECIAL
73	049972	ASSY POWER SUPPLY PCB
74	005348	SUPPORT BRACKET
75	005395	POWER SUPPLY SHIELD
76	021030	SPACER 6 X 1/4
77	017160	TAB MOUNTING .140 DIA MTG
78	005350	BOTTOM COVER
79	101078	SCREW TAP 8-32 X 5/16 PH PN BLK
80	017841	FOOT
81	100159	SCREW MACH 10-32 X 3/4 PH PN BLK
82	024010	FOOT PAD
83	017761	AIR PIPE
84	100292	SCREW MACH 6-32 X 3/8 PH FH BLK
85	165069	TUBE KT88 MCINTOSH
86	165065	TUBE 12AX7A MCINTOSH
87	165067	TUBE 12AT7
88	050042	POTTED TRANSFORMER OUTPUT
89	050041	POTTED TRANSFORMER POWER
90	126986	DECAL OUTPUT TRANSFORMER
91	126985	DECAL POWER TRANSFORMER
92	005349	TUBE COVER
93	017862	FOOT PUSH-ON
94	005389	DUST COVER
95	126987	DECAL TOP COVER
96	100287	SCREW MACH 8-32 X 3/8 PH TR HD
97	101232	SCREW 6-32 X 1/4 PHIL FLAT
98	104017	WASHER FELT BLK 3/4 X 1/4 X 1/16
99	049695	ASSY KNOB 34 INDEX METRIC
100	049694	ASSY KNOB 21 INDEX METRIC
101	049637	ASSY KNOB 34 METRIC W/O INDEX
102	050055	ASSY KNOB 21 INDEX AMER

REPACKING INSTRUCTIONS

In the event it is necessary to repack the unit for shipment, the unit must be packed exactly as shown below.

IMPORTANT - For ease of shipment, attach the four feet to the bottom of the unit. Four, 1/4 - 20 x 2-1/4 bolts with washers must be used to fasten the unit securely to the wood skid. Failure to due this will result in shipping damage.

IMPORTANT - Remove Vacuum Tubes from unit and repack in original Tube Pack and place inside Tube Cover before shipping.

If a shipping carton or any of the interior parts is needed, please call or write the Customer Service Department of McIntosh Laboratory. Order parts from the accompanying list by part number.

Use the original shipping carton and interior parts only if they are in good serviceable condition.

Qty.	Part No.	Description
1	034051	Shipping carton bottom
2	034186	Foam pad (front and rear)
2	034187	Foam Pad (side)
2	034054	Foam pad (top and bottom)
1	034052	Shipping carton (top)
1	034137	Inner carton (bottom)
1	034161	Shipping skid
1	034188	Foam pad (inner carton)
1	034136	Inner carton (top)
4	101212	1/4 - 20 x 2-1/4 cap screw
4	104058	Flat washer
2	034179	Tube pack
3	034180	Tube pack (end)

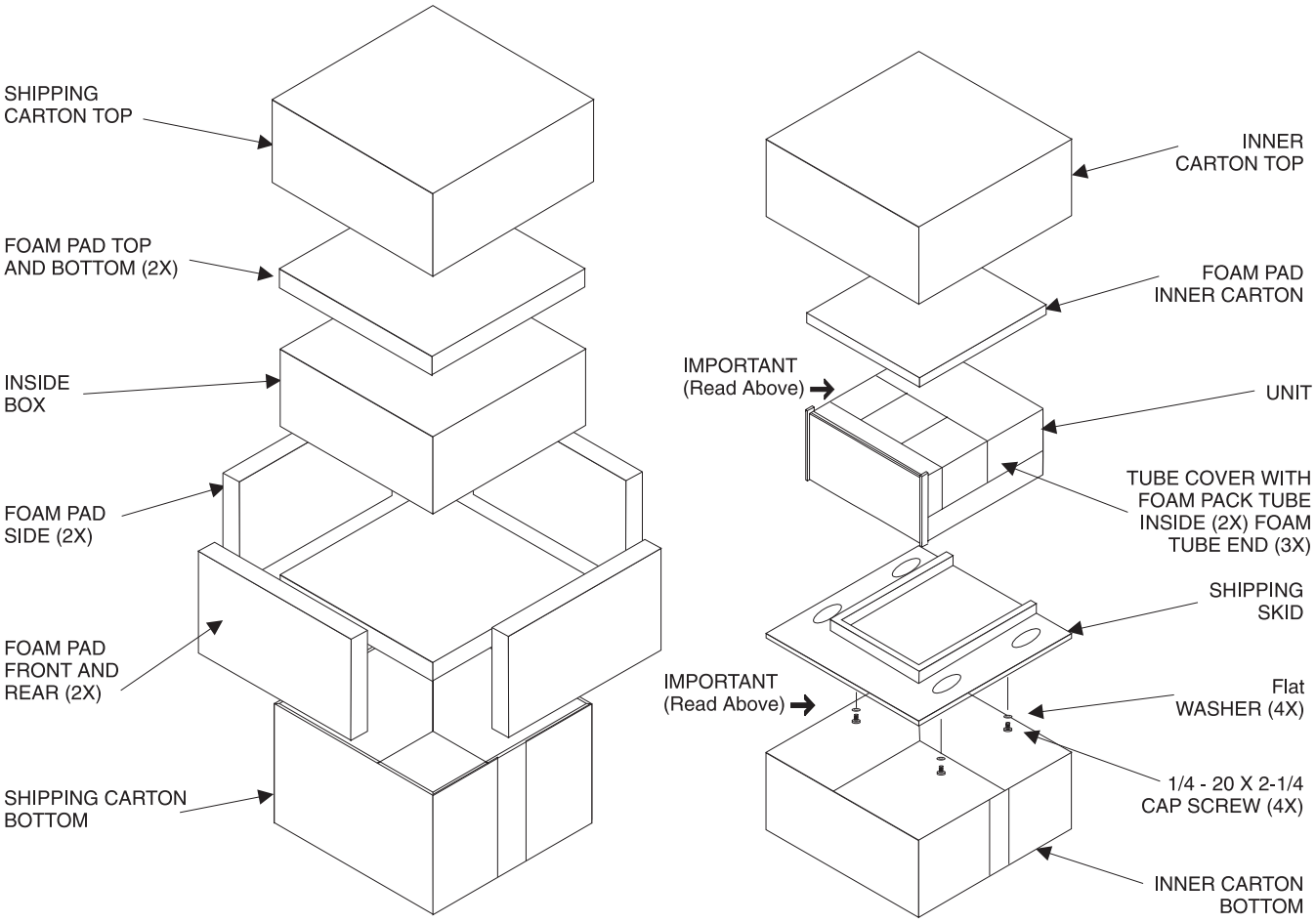

MA2275

TUBE INTEGRATED AMPLIFIER

SERVICE MANUAL

The continuous improvement of its products is the policy of McIntosh Laboratory Incorporated, who reserve the right to improve design without notice. Because of the constant upgrading of McIntosh products' circuitry and components, the Company cannot insure, and does not warrant, the accuracy of the within schematic material, which is intended for information only.

McINTOSH LABORATORY, INC., 2 CHAMBERS STREET, BINGHAMTON, NEW YORK 13903 Printed in U.S.A. Part Number 040916